Innovative Service Around the Globe YAGEO

PRODUCT SELECTION GUIDE
2012

SMD RESISTORS + MLCC

SMD CERAMIC EMI FILTER CAPACITORS - X2Y®

HIGH FREQUENCY PRODUCTS

MULTILAYER CHIP VARISTORS

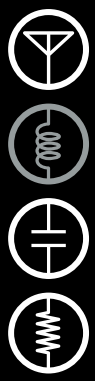

www.yageo.com

YAGEO
Phycomp

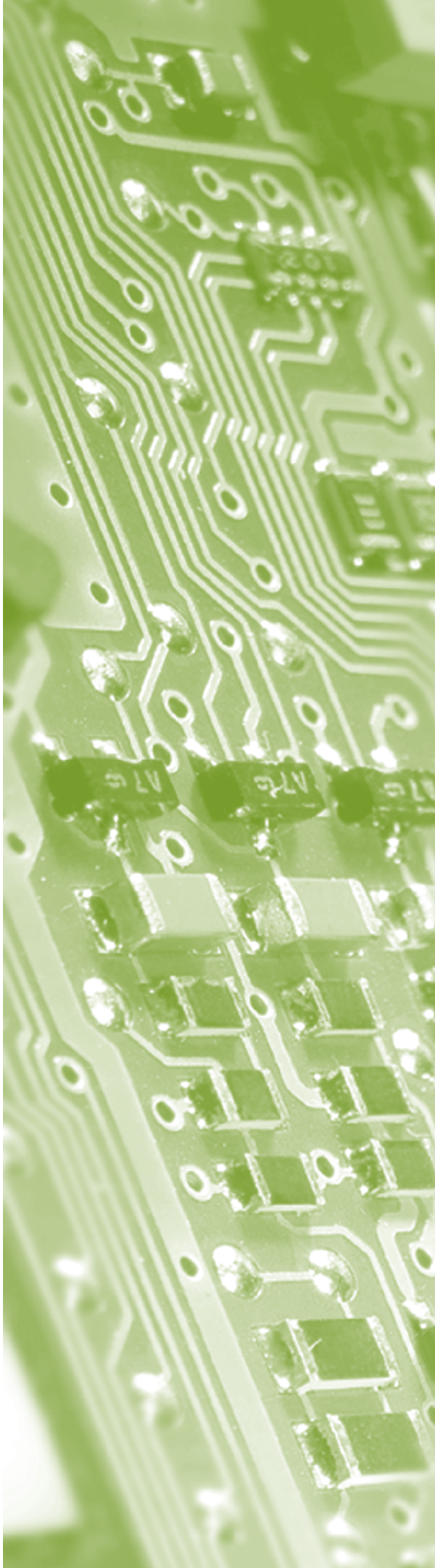

91
95
CHK LEAD
116/78

F1
F2
CLEAR
FEED
VOID

Part numbering system and ordering

You can order components from this catalogue in two ways. Both ways give logistic and packing information.

- **Clear text ordering code**
  This unique number is an easily-readable code.
  - 15 digits code (PHYCOMP CTC)
  - 14 to 17 digits code (GLOBAL PART NUMBER for both Yageo and Phycomp branded products)
- **12 digits ordering code**
  This unique 12NC number forms the basis of the Phycomp logistic system.

You will find details for ordering in the "*Ordering"* section next to each selection chart.

Minimum shipment quantities, prices and delivering details can be obtained from the Yageo sales organization in your country or from one of our franchised distributors.

Case size codes

Throughout this catalogue, inch-based codes are used for the component sizes. According to IEC 60384-10, amendment 2 of September 2000 for MLCCs, and IEC 60115-8, amendment 1 of July 2000 for R-chip. Values for length and width should be in millimeters rather than in inches. To distinguish between inch-based codes and metric-based codes, metric-based codes will temporarily have the suffix ''M''. The table right next shows the relation between inch-based case sizes versus the recommended metric case size designators. Please note that HF products use metric case size only.

Case size designation and cross-reference					
Inch-based	Metric	Inch-based	Metric	Inch-based	Metric
01005	0402M	0612	1632M	1224	3250M
0201	0603M	0616	1640M	1225	3264M
0202	0605M	0805	2012M	1812	4532M
0402	1005M	0815	2037M	2007	5320M
0404	1010M	0830	2075M	2010	5025M
0408	1020M	1008	2520M	2220	5750M
0508	1220M	1206	3216M	2512	6432M
0603	1608M	1210	3225M	3014	7836M
0606	1616M	1218	3245M	4527	11070M

Contact us

Founded in 1977, the Yageo Corporation has become a world-class provider of passive-component services with capabilities on a global scale, including production and sales facilities in Asia, Europe and America. The corporation is uniquely positioned to provide one-stop-shopping, offering its complete product portfolio of resistors, capacitors and inductors in both commodity and specialty versions, plus design-in capability, distribution, e-commerce connection and logistics. Yageo markets its products under the product brand names Yageo, Phycomp and Vitrohm. All products can be obtained from our Yageo sales offices, of which contact details can be found on the backcover of this catalogue. For most up-to-date information, as well as contact details of our franchise distributors, please refer to our website: **www.yageo.com**

Table of Contents

Chip Resistors General Information		8
	Specification overview	8
	Ordering information - Global part number	11
	Ordering information - North America	13
	IEC publication 63, SPQ, last digit of 12NC	14
Chip Resistors Selection Charts		15
	Thick film chip resistors	15
	Thick film general purpose chip resistors, 01005 to 2512	15
	Thick film high ohmic chip resistors	20
	Thick film high ohmic chip resistors, 0805 / 1206	20
	Thick film precision grade chip resistors	22
	Thick film precision grade chip resistors, 0402 to 1206	22
	Thin film chip resistors	25
	Thin film high precision high stability chip resistors, 0402 to 2512	25
	Thin film general purpose chip resistors, 0402 to 2512	29
	Thick film low ohmic chip resistors	30
	Thick film low ohmic chip resistors, 0402 to 2512	30
	Thick film low ohmic, high power chip resistors, 0805 / 1206	34
	Thick film low ohmic low T. C. R. chip resistors	35
	Thick film low ohmic low T. C. R. chip resistors, 0402 to 2512	35
	Thick film low ohmic low T. C. R. chip resistors, wide termination	38
	Thick film low ohmic low T. C. R. chip resistors, wide termination, 0815	38
	Current sensors - low T. C. R. chip resistors	41
	Current sensors - low T. C. R. chip resistors, 0603 to 4527	41
	Current sensors - low T. C. R. chip resistors, wide termination	45
	Current sensors - low T. C. R. chip resistors, wide termination, 0612 to 0830	45
	Thick film array / network chip resistors	48
	Thick film array / network chip resistors	48
	Arrays, convex / concave	50
	Networks, T-type / L-type	51
	NiAu termination chip resistors	52
	NiAu termination chip resistors, 0402 to 1206	52
	Surge chip resistors	55
	Surge chip resistors, 0805 to 2512	55
	High voltage chip resistors	58
	High voltage chip resistors, 0805 to 2512	58
	Trimmable chip resistors	61
	Trimmable chip resistors, 0402 to 1206	61
	Anti-sulfurated chip resistors	64
	Anti-sulfurated chip resistors, 0402 to 1206	64
	Automotive grade chip resistors	67
	Automotive grade chip resistors, 0402 to 2512	67
	RF attenuator chip resistors	70
	RF attenuator chip resistors, 0404	70
Chip Resistors Engineering Design Kits		73
	Engineering design kits	73

MLCC General Information		76
	Specification overview	76
	Ordering information - Global part number	77
	Ordering information - North America	79
	Thickness classes and packing quantities for all series	80
MLCC Selection Charts		81
	NP0 - General purpose	81
	NP0 - General purpose 16 to 25V, 0201 to 0603	82
	NP0 - General purpose 16 to 25V, 0805 to 1210	83
	NP0 - General purpose 50V, 0201 to 1812	85
	NP0 - Medium & High voltage	88
	NP0 - Medium voltage, 0402 to 0805	89
	NP0 - Medium voltage, 1206 / 1210	90
	NP0 - Medium voltage, 1808 / 1812	91
	NP0 - High voltage, 0805 to 1812	92
	NP0 - High frequency	94
	NP0 - High frequency, 0402 to 0805	95
	X7R - General purpose & High capacitance	97
	X7R - General purpose, 0201 / 0402	98
	X7R - General purpose & High capacitance, 0603 / 0805	99
	X7R - General purpose & High capacitance, 1206 to 1812	100
	X7R - Medium & High voltage	101
	X7R - Medium voltage, 0603 / 0805	102
	X7R - Medium voltage, 1206 / 1210	103
	X7R - Medium voltage, 1812	104
	X7R - High voltage, 1206 / 1210	105
	X7R - High voltage, 1808 / 1812	106
	X7R - Low inductance	108
	X7R - Low inductance, 0306 to 0612	109
	X7R - Soft termination	111
	X7R - Soft termination, 0603 / 0805	112
	X7R - Soft termination, 1206	113
	X5R - General purpose & High capacitance	114
	X5R - General purpose & High capacitance, 0201 / 0402	115
	X5R - General purpose & High capacitance, 0603 / 0805	116
	X5R - High capacitance, 1206	117
	X5R - High capacitance, 1210 / 1812	118
	X5R - Low profile	120
	X5R - Low profile, 0402 to 0805	121
	Y5V - General purpose & High capacitance	122
	Y5V - General purpose & High capacitance 6.3 to 25V, 0201 / 0402	123
	Y5V - General purpose & High capacitance 6.3 to 25V, 0603 / 0805	124
	Y5V - General purpose & High capacitance 6.3 to 25V, 1206 / 1210	125
	Y5V - General purpose & High capacitance 50V, 0402 to 1206	126
	Automotive grade MLCCs	128
	NP0 - Automotive grade, 0402 to 0805	129
	NP0 - Automotive grade, 1206 / 1210	130

Table of Contents

	X7R - Automotive grade, 0402 / 0603	131
	X7R - Automotive grade, 0805	132
	X7R - Automotive grade, 1206	133
	X7R - Automotive grade, 1210	134
	Safety certification MLCCs	135
	NP0 - High voltage SC type, 1808 / 1812	136
	X7R - High voltage SC type, 1808 / 1812	137
	Arrays	139
	NP0 - 4C Arrays, 0508 / 0612	141
	X7R - 4C Arrays, 0508 / 0612	142
	Y5V - 4C Arrays, 0612	143
MLCC Engineering Design Kits		145
	Sample kits for 0201 / 0402	145
	Sample kits for 0603 / 0805	146
	Sample kits for 1206	147
	Sample kits for high capacitance series	148
	High voltage sample kits for general applications	149
	High voltage sample kits for safety certification MLCCs	150
	Sample kits for high frequency series	151
	Sample kits for all sizes, all types, E1 series only	152

X2Y® Product Selection Charts		154
	SMD ceramic EMI filter capacitors X2Y® series	154
	Ordering information	155

HF Product Selection Charts		158
	Antenna	158
	Specification overview - Antenna	158
	Antenna for WWAN - GSM/LTE, Satellite Communication - GPS	159
	Antenna for WPAN / WLAN / WMAN	160
	Chip antenna	161
	Specification overview - Chip antenna	161
	Patch antenna for GPS / SDARS / Glonass	162
	Chip antenna for FM / UHF / GPS / GSM / WiMAX	163
	Chip antenna for Dual-band / Chip-on-Board / WWAN	164
	Chip antenna for Bluetooth / WiFi	165
	Band pass filter	166
	Low pass filter	167
	Diplexer	168
	Balun and Balanced filter	169

MLV Product Selection Charts		172
	Case dimensions and specification for 0402	172
	Specification for 0603	173
	Ordering information for 0402 / 0603	174

SURFACE-MOUNT CHIP RESISTORS

Specification overview

Global part number	Series	Size	Power rating	Max. voltage	Operating Temp. range	Resistance range	Tolerance	T. C. R.
! RC0100xR-07xxxxL	RC	01005	1/32W	15V	-55°C to 125°C	10Ω ≤ R ≤ 1MΩ Jumper < 50mΩ	±1% ±5%	10Ω ≤ R ≤ 1MΩ ±250 ppm/°C
RC0201xR-07xxxxL		0201	1/20W	25V		1Ω ≤ R ≤ 10MΩ Jumper < 50mΩ	Max./Min.: 1MΩ/10Ω ±0.5% Max.: 10MΩ ±1%,±5%	1Ω ≤ R ≤ 10Ω -100/+350 ppm/°C 10Ω < R ≤ 10MΩ ±200 ppm/°C
RC0402xR-07xxxxL		0402	1/16W	50V	-55°C to 155°C	1Ω ≤ R ≤ 22MΩ Jumper < 50mΩ	Max./Min.: 1MΩ/10Ω ±0.5% Max.: 10MΩ ±1% Max.: 22MΩ ±5%	1Ω ≤ R ≤ 10Ω ±200 ppm/°C 10Ω < R ≤ 10MΩ ±100 ppm/°C 10MΩ < R ≤ 22MΩ ±200 ppm/°C
RC0603xR-07xxxxL		0603	1/10W	50V				
RC0805xR-07xxxxL		0805	1/8W	150V				
RC1206xR-07xxxxL		1206	1/4W	200V				
RC1210xR-07xxxxL		1210	1/2W	200V				
RC1218xK-07xxxxL		1218	1W	200V		1Ω ≤ R ≤ 1MΩ Jumper < 50mΩ		
RC2010xK-07xxxxL		2010	3/4W	200V		1Ω ≤ R ≤ 22MΩ Jumper < 50mΩ		
RC2512xK-07xxxxL		2512	1W	200V				
! RC0603xR-7WxxxxL		0603	1/5W	50V		1Ω ≤ R ≤ 10 KΩ Jumper < 50mΩ	±1% ±5%	±200 ppm/°C
RC0805xR-7WxxxxL		0805	1/4W	150V		1Ω ≤ R ≤ 1MΩ Jumper < 50mΩ		
RC1206xR-7WxxxxL		1206	1/2W	200V				
RC2512xK-7WxxxxL		2512	2W	200V		1Ω ≤ R ≤ 150Ω Jumper < 50mΩ		
RC0805xR-07xxxxL		0805	1/8W	150V		24MΩ ≤ R ≤ 100MΩ	±5%, ±10%, ±20%	±300 ppm/°C
RC1206xR-07xxxxL		1206	1/4W	200V		24MΩ ≤ R ≤ 100MΩ		
RE0402xRE07xxxxL	RE	0402	1/16W	50V	-55°C to 155°C	10Ω ≤ R ≤ 1MΩ	±0.5% ±1% ±5%	±50 ppm/°C
RE0603xRE07xxxxL		0603	1/10W	50V		10Ω ≤ R ≤ 1MΩ		
RE0805xRE07xxxxL		0805	1/8W	150V		10Ω ≤ R ≤ 1MΩ		
RE1206xRE07xxxxL		1206	1/4W	200V		10Ω ≤ R ≤ 1MΩ		
RT0402xRx07xxxxL	RT	0402	1/16W	50V	-55°C to 155°C	10Ω ≤ R ≤ 121KΩ	±0.05% ±0.1% ±0.25% ±0.5% ±1%	±10 ppm/°C ±15 ppm/°C ±25 ppm/°C ±50 ppm/°C
RT0603xRx07xxxxL		0603	1/10W	75V		5.1Ω ≤ R ≤ 681KΩ		
RT0805xRx07xxxxL		0805	1/8W	150V		5.1Ω ≤ R ≤ 1.5MΩ		
RT1206xRx07xxxxL		1206	1/4W	200V		5.1Ω ≤ R ≤ 1.5MΩ		
RT1210xRx07xxxxL		1210	1/4W		-55°C to 125°C	5.1Ω ≤ R ≤ 1MΩ		
RT2010xKx07xxxxL		2010	1/2W			10Ω ≤ R ≤ 1MΩ		
RT2512xKx07xxxxL		2512	3/4W			10Ω ≤ R ≤ 1MΩ		
RJ0402FRE07xxxxL	RJ	0402	1/16W	25V	-55°C to 125°C	10Ω ≤ R ≤ 121KΩ	±1%	±50 ppm/°C
RJ0603FRE07xxxxL		0603	1/16W	50V		5.1Ω ≤ R ≤ 681KΩ		
RJ0805FRE07xxxxL		0805	1/10W	100V		5.1Ω ≤ R ≤ 1.5MΩ		
RJ1206FRE07xxxxL		1206	1/8W	150V		5.1Ω ≤ R ≤ 1.5MΩ		
RJ1210FRE07xxxxL		1210	1/4W			5.1Ω ≤ R ≤ 1MΩ		
RJ2010FKE07xxxxL		2010	1/2W			10Ω ≤ R ≤ 1MΩ		
RJ2512FKE07xxxxL		2512	3/4W			10Ω ≤ R ≤ 1MΩ		
YC102-xR-07xxxxL	YC	2*0201	1/32W	15V	-55°C to 125°C	10Ω ≤ R ≤ 1MΩ Jumper < 50mΩ	±1% ±5%	±200 ppm/°C
! YC104-xR-07xxxxL		4*0201	1/32W	12.5V				
YC122-xR-07xxxxL		2*0402	1/16W	50V		1Ω ≤ R ≤ 1MΩ Jumper < 50mΩ	Max./Min.: 1MΩ/10Ω ±1% Max.: 1MΩ ±5%	
YC124-xR-07xxxxL		4*0402	1/16W	25V	-55°C to 155°C	1Ω ≤ R ≤ 1MΩ Jumper < 50mΩ	±1% ±5%	1Ω ≤ R < 10Ω ±250 ppm/°C 10Ω ≤ R ≤ 1MΩ ±200 ppm/°C
YC162-xR-07xxxxL		2*0603	1/16W	50V	-55°C to 125°C	10Ω ≤ R ≤ 1MΩ Jumper < 50mΩ	±5%	±200 ppm/°C
YC164-xR-07xxxxL		4*0603	1/16W	50V	-55°C to 155°C	1Ω ≤ R ≤ 1MΩ Jumper < 50mΩ	±1% ±5%	
YC248-xR-07xxxxL		8*0602	1/16W	50V		10Ω ≤ R ≤ 1MΩ Jumper < 50mΩ		
YC324-xR-07xxxxL		4*1206	1/8W	200V		10Ω ≤ R ≤ 1MΩ		
TC122-xR-07xxxxL	TC	2*0402	1/16W	50V	-55°C to 125°C	10Ω ≤ R ≤ 1MΩ Jumper < 50mΩ	±1% ±5%	
TC124-xR-07xxxxL		4*0402	1/16W	50V				
TC164-xR-07xxxxL		4*0603	1/16W	50V	-55°C to 155°C	1Ω ≤ R ≤ 1MΩ		

Note: " ! " is the symbol for new product

Global part number	Series	Size	Power rating	Max. voltage	Operating Temp. range	Resistance range	Tolerance	T. C. R.
YC158TJR-07xxxxL	YC158	10P8R (0612)	1/16W	25V	-55°C to 155°C	10Ω ≤ R ≤ 100KΩ	±5%	±200 ppm/°C
YC358xJK-07xxxxL	YC358	10P8R (1225)	1/16W	50V		10Ω ≤ R ≤ 330KΩ		±200 ppm/°C
RL0402xR-07xxxxL	RL	0402	1/16W	(PxR)^1/2	-55°C to 125°C	50mΩ ≤ R < 1Ω	±1% ±2% ±5%	See page 31, table "T. C. R. - RL series"
RL0603xR-07xxxxL		0603	1/10W			10mΩ ≤ R < 1Ω		
RL0805xR-07xxxxL		0805	1/8W					
RL0805xR-7WxxxxL			1/4W					
RL1206xR-07xxxxL		1206	1/4W					
RL1206xR-7WxxxxL			1/2W					
RL1210xR-07xxxxL		1210	1/2W					
RL1218xK-07xxxxL		1218	1W					
RL2010xK-07xxxxL		2010	3/4W					
RL2512xK-07xxxxL		2512	1W					
! PT0402xR-07xxxxL	PT	0402	1/16W	(PxR)^1/2	-55°C to 155°C	50mΩ ≤ R < 1Ω	±1% ±2% ±5%	50mΩ ≤ R < 68mΩ ±600 ppm/°C 68mΩ ≤ R < 100mΩ ±300 ppm/°C 100mΩ ≤ R < 1Ω ±200 ppm/°C
! PT0402xR-7WxxxxL			1/8W					
! PT0402xR-7TxxxxL			1/6W			68mΩ		±300 ppm/°C
! PT0603xR-07xxxxL		0603	1/10W			50mΩ ≤ R < 1Ω Jumper < 8mΩ		50mΩ 0/+400 ppm/°C 50mΩ < R < 68mΩ 0/+350 ppm/°C 68mΩ ≤ R < 100mΩ 0/+300 ppm/°C 100mΩ ≤ R < 1Ω ±200 ppm/°C
! PT0603xR-7WxxxxL			1/5W					
! PT0603xR-7TxxxxL			1/3W			50mΩ ≤ R ≤ 68mΩ		
! PT0805xR-07xxxxL		0805	1/8W			50mΩ ≤ R < 1Ω		50mΩ 0/+350 ppm/°C 50mΩ < R < 68mΩ 0/+300 ppm/°C 68mΩ ≤ R < 100mΩ 0/+250 ppm/°C 100mΩ ≤ R < 1Ω ±100 ppm/°C
! PT0805xR-7WxxxxL			1/4W					
! PT1206xR-07xxxxL		1206	1/4W			100mΩ ≤ R < 1Ω Jumper < 5mΩ		100mΩ ±100 ppm/°C 100mΩ < R < 1Ω ±75 ppm/°C
! PT1206xR-7WxxxxL			1/2W					
PT2010xK-07xxxxL		2010	3/4W			100mΩ ≤ R < 1Ω		
PT2010xK-7WxxxxL			1W					
PT2512xK-07xxxxL		2512	1W					
PT2512xK-7WxxxxL			2W					
PT0815xK-07xxxxL	PT (Wide)	0815	1/2W	(PxR)^1/2	-55°C to 155°C	25mΩ ≤ R ≤ 50mΩ	±1% ±2% ±5%	±100 ppm/°C
PT0815xK-7WxxxxL			1W					
! PR1206xKx07xxxxxx	PR	1206	1/4W	(PxR)^1/2	-55°C to 155°C	1mΩ ≤ R ≤ 6mΩ	±1% ±2% ±5%	±50 ppm/°C
! PR1206xKx7Wxxxxxx			1/2W					
! PR1206xKx47xxxxxx			1W					
PR2010xKx07xxxxxx		2010	1/2W			1mΩ ≤ R < 100mΩ		
PR2010xKx7Wxxxxxx			1W					
PR2512xKx07xxxxxx		2512	1W			0.5mΩ ≤ R ≤ 5mΩ	±1% ±2% ±5%	0.5mΩ ≤ R ≤ 2mΩ ±200 ppm/°C 3mΩ ≤ R ≤ 5mΩ ±100 ppm/°C
PR2512xKx7Wxxxxxx			2W					
! PR2512xKx7Txxxxxx			3W			0.5mΩ ≤ R ≤ 10mΩ		±50 ppm/°C
! PR2512DKx07xxxxxx			1W			7mΩ ≤ R ≤ 75mΩ	±0.5%	
! PR2512DKx7Wxxxxxx			2W					
! PA2512xKF07xxxxL	PA	2512	1W	(PxR)^1/2	-55°C to 155°C	1mΩ ≤ R ≤ 10mΩ	±1% ±5%	±100 ppm/°C
! PA2512xKF7WxxxxL			2W					
! PA2512xKF7TxxxxL			3W					
! PF0603xRx57xxxxxx	PF	0603	1/2W	(PxR)^1/2	-55°C to 155°C	5mΩ ≤ R ≤ 100mΩ	±1% ±2% ±5%	±75 ppm/°C
PF0805xRx07xxxxxx		0805	1/8W			4mΩ ≤ R ≤ 100mΩ		
PF0805xRx7Wxxxxxx			1/4W					
PF0805xRx7Txxxxxx			1/3W					
! PF0805xRx47xxxxxx			1/2W					
PF1206xxx07xxxxxx		1206	1/4W			3mΩ ≤ R < 100mΩ		
PF1206xxx7Wxxxxxx			1/2W					
! PF2010xKx7Wxxxxxx		2010	1W			5mΩ ≤ R < 100mΩ		

Note: " ! " is the symbol for new product

Specification overview

Global part number	Series	Size	Power rating	Max. voltage	Operating Temp. range	Resistance range	Tolerance	T. C. R.
PF2512xKx07xxxxxx	PF	2512	1W	(PxR)^1/2	-55°C to 155°C	1mΩ ≤ R < 100mΩ	±1% ±2% ±5%	±75 ppm/°C
PF2512xKx7Wxxxxxx			2W					
! PF2512xKx7Txxxxxx			3W			1mΩ ≤ R ≤ 50mΩ		
! PF4527xKx7Wxxxxxx		4527	3W			6mΩ ≤ R < 1Ω		
! PF0612xKx07xxxxxx	PF (Wide)	0612	1W	(PxR)^1/2	-55°C to 155°C	1mΩ ≤ R ≤ 50mΩ	±1% ±2% ±5%	±75 ppm/°C
! PF0815xKx7Wxxxxx		0815	1W	(PxR)^1/2	-55°C to 155°C	1mΩ ≤ R ≤ 20mΩ		
! PF0830xKx07xxxxx		0830	2W			1mΩ ≤ R ≤ 100mΩ		
! PH0805xRx07xxxxxx	PH	0805	4/5W	(PxR)^1/2	-55°C to 155°C	4mΩ ≤ R ≤ 50mΩ	±1% ±2% ±5%	±75 ppm/°C
PH1206xRx07xxxxxx		1206	1W					
! PE0603xRx57xxxxxx	PE	0603	1/2W	(PxR)^1/2	-55°C to 155°C	5mΩ ≤ R < 100mΩ	±1% ±2% ±5%	±75 ppm/°C
! PE0805xRx47xxxxxx		0805	1/2W			4mΩ ≤ R < 100mΩ		
! PE1206xRx47xxxxxx		1206	1W			3mΩ ≤ R < 100mΩ		
PE2512xKx7Wxxxxxx		2512	2W			1mΩ ≤ R < 100mΩ		
AR0402xR-07xxxxL	AR	0402	1/16W	50V	-55°C to 155°C	1Ω ≤ R ≤ 10MΩ Jumper < 50mΩ	±1% ±5%	1Ω ≤ R ≤ 10Ω ±200 ppm/°C 10Ω < R ≤ 10MΩ ±100 ppm/°C
AR0603xR-07xxxxL		0603	1/10W					
AR0805xR-07xxxxL		0805	1/8W	150V				
AR1206xR-07xxxxL		1206	1/4W	200V				
SR0805xR-07xxxxL	SR	0805	1/8W	150V	-55°C to 155°C	1Ω ≤ R ≤ 100KΩ	±5% ±10% ±20%	±200 ppm/°C
SR1206xR-07xxxxL		1206	1/4W	200V				
SR1218xK-07xxxxL		1218	1W					
SR2010xK-07xxxxL		2010	3/4W					
SR2512xK-07xxxxL		2512	1W					
RV0805xR-07xxxxL	RV	0805	1/8W	400V	-55°C to 155°C	100KΩ ≤ R ≤ 10MΩ	±1% ±5%	±200 ppm/°C
RV1206xR-07xxxxL		1206	1/4W	500V		100KΩ ≤ R ≤ 27MΩ	Max.: 10MΩ ±1% Max.: 27MΩ ±5%	
RV2512JK-07xxxxL		2512	1W			4.7MΩ ≤ R ≤ 16MΩ	±5%	
TR0402xR-07xxxxL	TR	0402	1/16W	50V	-55°C to 125°C	1Ω ≤ R ≤ 10MΩ	+0/-10% +0/-20% +0/-30%	1Ω ≤ R ≤ 10Ω ±200 ppm/°C 10Ω < R ≤ 1MΩ ±100 ppm/°C 1MΩ < R ≤ 10MΩ ±200 ppm/°C
TR0603xR-07xxxxL		0603	1/16W					
TR0805xR-07xxxxL		0805	1/8W	150V	-55°C to 155°C			
TR1206xR-07xxxxL		1206	1/4W	200V				
AF0402xR-07xxxxL	AF	0402	1/16W	50V	-55°C to 155°C	1Ω ≤ R ≤ 22MΩ Jumper < 50mΩ	Max.: 10MΩ ±1% Max.: 22MΩ ±5%	1Ω ≤ R ≤ 10Ω ±200 ppm/°C 10Ω < R ≤ 10MΩ ±100 ppm/°C 10MΩ < R ≤ 22MΩ ±200 ppm/°C
AF0603xR-07xxxxL		0603	1/10W					
AF0805xR-07xxxxL		0805	1/8W	150V				
AF1206xR-07xxxxL		1206	1/4W	200V				
! AC0402xR-07xxxxL	AC	0402	1/16W	50V	-55°C to 155°C	1Ω ≤ R ≤ 10MΩ Jumper < 50mΩ	±1% ±5%	1Ω ≤ R ≤ 10Ω ±200 ppm/°C 10Ω < R ≤ 10MΩ ±100 ppm/°C
! AC0603xR-07xxxxL		0603	1/10W	50V				
! AC0805xR-07xxxxL		0805	1/8W	150V				
! AC1206xR-07xxxxL		1206	1/4W	200V				
! AC1210xR-07xxxxL		1210	1/2W	200V				
! AC1218xK-07xxxxL		1218	1W	200V				
! AC2010xK-07xxxxL		2010	3/4W	200V				
! AC2512xK-07xxxxL		2512	1W	200V				
ATV321xR-07xxxxL	AT	0404	40mW	50V	-55°C to 125°C	-1dB to -20dB	±0.3dB ±0.5dB ±1.0dB ±2.0dB	---

Note: " ! " is the symbol for new product

Global part number - Single resistor [3]

R C 0 4 0 2 J R — 7 D 1 0 R L

Series name (code 1-2)
- RC = Thick film general purpose
- RE = Thick film precision grade
- RT = Thin film high precision high stability
- RJ = Thin film general purpose
- RL = Thick film low ohmic
- PT = Thick film low ohmic low T. C. R.
- PR/PA/PF/PH/PE = Current sensor - low T. C. R.
- TR = Trimmable
- SR = Surge
- AR = NiAu termination
- RV = High voltage
- AF = Anti-sulfurated
- AC = Automotive grade

Size code (code 3-6)
(inch / metric)
- 0100 = 0.4 x 0.2
- 0201 = 0.6 x 0.3
- 0402 = 1.0 x 0.5
- 0603 = 1.6 x 0.8
- 0612 = 1.6 x 3.2
- 0805 = 2.0 x 1.25
- 0815 = 2.15 x 3.75
- 0830 = 2.0 x 7.5
- 1206 = 3.2 x 1.6
- 1210 = 3.2 x 2.6
- 1218 = 3.2 x 4.5
- 2010 = 5.0 x 2.5
- 2512 = 6.35 x 3.2
- 4527 = 11.0 x 7.0

Tolerance (code 7)
- W = ±0.05%
- B = ±0.1%
- C = ±0.25%
- D = ±0.5%
- F = ±1%
- G = ±2%
- J = ±5% (for RC/AR/AF/AC Jumper ordering)
- K = ±10% (for TR = 0/-10%)
- M = ±20% (for TR = 0/-20%)
- N = ±30% (for TR = 0/-30%)
- "—" for PT Jumper ordering

Default code [1/2] (code 17)

Resistance (code 12-16)
- 0R = Jumper
- 0R1 = 0.1Ω
- 1R = 1Ω
- 10R = 10Ω
- 100R = 100Ω
- 1K = 1 000Ω
- 1M = 1 000 000Ω
- 100M = 100 000 000Ω

Taping reel (code 10-11)
- 07 = 7 inch Dia. reel
- 10 = 10 inch Dia. reel
- 13 = 13 inch Dia. reel
- 7D = 7 inch Dia. reel 2 x standard quantity

T. C. R. (code 9)
- B = ±10 ppm/°C (on request)
- C = ±15 ppm/°C (on request)
- D = ±25 ppm/°C
- E = ±50 ppm/°C
- M = ±75 ppm/°C
- F=±100 ppm/°C
- G = ±200 ppm/°C
- "—" = Based on spec.
- (— for thick film only)

Packing style (code 8)
- R = Paper tape reel
- K = Embossed plastic tape reel
- C = Bulk cassette
- S = ESD safe reel

Note: 1. All of our RSMD products are RoHS compliant. "LFP" of the internal 2D reel label mentions "Lead Free Process"
2. Letter L is system default code for ordering only
3. Global Part Number is the preferred clear text code for ordering Yageo and Phycomp branded products.

Ordering information - Global part number

Global part number - Power enhancement

RL 0805 J R — 7W 0R015 L

Series name (code 1-2)
- RC = Thick film general purpose
- RL = Thick film low ohmic
- PT = Thick film low ohmic low T. C. R.
- PR/PA/PF/PE = Current sensor - low T. C. R.

Size code (code 3-6)
(inch / metric)
- 0805 = 2.0 x 1.25
- 0815 = 2.15 x 3.75
- 1206 = 3.2 x 1.6
- 2010 = 5.0 x 2.5
- 2512 = 6.35 x 3.2

Tolerance (code 7)
- F = ±1%
- G = ±2%
- J = ±5%

Packing style (code 8)
- R = Paper tape reel
- K = Embossed plastic tape reel

Default code (code 17)
- L / Z = Default code

Resistance (code 12-16)
- 0R01 = 0.01Ω
- 0R1 = 0.1Ω

Taping reel (code 10-11)
- 07 = 7 inch Dia. reel
- 7W = 7 inch Dia. reel 2 x standard power type
- 7T = 7 inch Dia. reel 3 x standard power type
- 47 = 7 inch Dia. reel 4 x standard power type
- 57 = 7 inch Dia. reel 5 x standard power type

T. C. R. (code 9)
- E = ±50 ppm/°C
- M = ±75 ppm/°C
- F = ±100 ppm/°C
- G = ±200 ppm/°C
- "—" = Based on spec.
- (— for thick film only)

Global part number - Arrays & Networks

YC 16 4 — J R — 07 10R L

Series name (code 1-2)
- YC = Array & Network (convex) thick film
- TC = Array (concave) thick film

Size code (inch) (code 3-4)
- 10 = 0201 x 2 (0202)
  - 0201 x 4 (0204)
- 12 = 0402 x 2 (0404)
  - 0402 x 4 (0408)
- 15 = 10Pin/8R (0612)
- 16 = 0603 x 2 (0606)
  - 0603 x 4 (0612)
- 24 = 0602 x 8 (0616)
- 32 = 1206 x 4 (1224)
- 35 = 10Pin/8R (1225)

Number of resistors (code 5)
- 2 = 2 resistors
- 4 = 4 resistors
- 8 = 8 resistors

Schematic (code 6)
- L = L-type (for YC358)
- T = T-type (for YC158/358)
- "—" = Based on spec.

Tolerance (code 7)
- F = ±1%
- J = ±5% (for Jumper ordering)

Default code (code 17)

Resistance (code 12-16)
- 0R = Jumper
- 0R1 = 0.1Ω
- 1R = 1Ω
- 10R = 10Ω
- 100R = 100Ω
- 1K = 1 000Ω
- 1M = 100 000 000

Taping reel (code 10-11)
- 07 = 7 inch Dia. reel
- 10 = 10 inch Dia. reel
- 13 = 13 inch Dia. reel

T.C.R. (code 9)
- "—" = Based on spec.

Packing style (code 8)
- R = Paper tape reel
- K = Embossed plastic tape reel

Phycomp CTC ordering code - Noth America

Ordering example: 9C06031A10R0FKHFT = R-Chip 0603, 10R0, 1%, 5K reel

1-2	3-6	7-8	9-12	13	14	15-16	17
XX	XXXX	XX	XXXX	X	X	XX	X

Series name (code 1-2)
- 9C = Phycomp thick film chip resistors
- 9T = Phycomp thin film chip resistors

Size code (standard resistors, code 3-6)

0201	0201 (0603)
0402	0402 (1005)
0603	0603 (1608)
0805	0805 (2012)
1206	1206 (3216)
1210	1210 (3225)
1218	1218 (3248)
2010	2010 (5025)
2512	2512 (6432)
AC34	0603 (1608) 4R concave array
AV34	0603 (1608) 4R convex array
AV22	0402 (1005) 2R convex array
AV24	0402 (1005) 4R convex array
AV28	0402 (1005) 8R convex array
RN31	10P8R in 1206 convex network
FR01	1206 (3216) Fusible
FR21	0603 (1608) Fusible
SR01	1206 (3216) Surge
VR01	1206 (3216) High voltage 5%
VR02	1206 (3216) High voltage 1%
VR11	0805 (2012) High voltage 5%
VR12	0805 (2012) High voltage 1%
VR21	2512 (6432) High voltage 5%
MR22	2512 (6432) Current sensor - low T. C. R.
MF22	2512 (6432) Current sensor - low T. C. R.
V321	0404 (1010) RF attenuator

Power rating (code 7-8)

1A	1/16W	0.063W	(0402)
1A	1/10W	0.10W	(0603)
2A	1/8W	0.125W	(0805)
3A	1/4W	0.25W	(1206)
5A	1/2W	0.5W	(1210)
7A	1/20W	0.05W	(0201)
8A	1/32W	0.03125W	(RN31)
12	3/4W	0.75W	(2010)
1W	1W	1W	(1218/2512)
2W	2W	2W	

Resistance value (code 9-12)
- 0R00 = Jumper
- R0XX < 0.1Ω
- RXXX = 0.1Ω - 0.976Ω
- XRXX = 1Ω - 9.76Ω
- XXRX = 10Ω - 97.6Ω
- XXX0 = 100Ω - 976Ω
- XXX1 = 1K - 9.76K
- XXX2 = 10K - 97.6K
- XXX3 = 100K - 9.78K
- XXX4 = 1M - 9.76M
- XXX5 = 10M - 97.6M
- XXX6 = 100M+
- XXDB = 1 - 20DB

Tolerance (code 13)
- E = ±0.01%
- A = ±0.05%
- B = ±0.1%; 0.2dB
- C = ±0.25%; 0.3dB
- D = ±0.5%; 0.5dB
- F = ±1%; 1dB
- G = ±2%; 2dB
- J = ±5%
- N = 0/-20%
- R = 0/-30%

dB values apply to attenuators

Right values apply to trimmable resistors

T. C. R. (code 14)
- C = ±10 ppm/°C
- D = ±15 ppm/°C
- A = ±25 ppm/°C
- B = ±50 ppm/°C
- K = ±100 ppm/°C
- L = ±200 ppm/°C
- E = ±250 ppm/°C
- M = ±300 ppm/°C
- G = ±500 ppm/°C
- F = 0/+500 ppm/°C
- R = ±600 ppm/°C
- Q = -100/+600 ppm/°C
- P = ±750 ppm/°C
- H = ±1000 ppm/°C
- I = ±1500 ppm/°C
- J = ±2000 ppm/°C
- N = ±3000 ppm/°C

Special coding (code 15-16)
- HF = SnPb
- PF = Lead-free
- AF = NiAu

Packing style (code 17)
- T = 5K paper
- 3 = 10K paper
- 4 = 20K paper
- 5 = 4K blister
- 6 = 5K blister
- 7 = 50K paper
- P = 25K bulk case

IEC publication 63, SPQ, last digit of 12NC

Standard of values in a decade according to “IEC publication 63”												
E24 series	10	11	12	13	15	16	18	20	22	24	27	30
	33	36	39	43	47	51	56	62	68	75	82	91
E96 series	100	102	105	107	110	113	115	118	121	124	127	130
	133	137	140	143	147	150	154	158	162	165	169	174
	178	182	187	191	196	200	205	210	215	221	226	232
	237	243	249	255	261	267	274	280	287	294	301	309
	316	324	332	340	348	357	365	374	383	392	402	412
	422	432	442	453	464	475	487	499	511	523	536	549
	562	576	590	604	619	634	649	665	681	698	715	732
	750	768	787	806	825	845	866	887	909	931	953	976

Packing quantities								
Size code	Tape width	178mm / Ø7” reel		254mm / Ø10" reel	330mm / Ø13" reel		Weight	Volume
		Paper	Embossed	Paper	Paper	Embossed	g /100pcs	mm^3
0100	8mm	20 000	---	---	---	---	0.007	0.0104
0201	8mm	10 000 / 20 000	---	---	50 000	---	0.016	0.041
0402	8mm	10 000 / 20 000	---	20 000	50 000	---	0.058	0.175
0603	8mm	5 000	---	10 000	20 000	---	0.192	0.576
0612	8mm	---	5 000	---	---	---	0.862	2.728
0805	8mm	4 000 / 5 000	---	10 000	20 000	---	0.450	1.250
0815	8mm	---	4 000	---	---	---	1.71	4.44
0830	12mm	---	4 000	---	---	---	4.594	5.55
1206	8mm	4 000 / 5 000	4 000	10 000	20 000	---	0.862	2.728
1210	8mm	5 000	---	10 000	20 000	---	1.471	4.030
1218	12mm	---	4 000	---	---	---	2.703	7.590
2010	12mm	---	4 000 / 2 000	---	---	16 000	2.273	6.875
2512	12mm	---	4 000 / 2 000	---	---	---	3.704	10.827
4527	24mm	---	2 000	---	---	---	16.225	48.3
YC102	8mm	10 000	---	---	---	---	0.052	---
YC104	8mm	10 000	---	---	---	---	0.099	---
YC122	8mm	10 000	---	---	50 000	---	0.100	---
TC122	8mm	10 000	---	---	50 000	---	0.112	---
ATV321	8mm	10 000	--	---	---	---	0.100	---
YC124	8mm	10 000	---	20 000	40 000	---	0.281	---
TC124	8mm	10 000	---	20 000	40 000	---	0.311	---
YC162	8mm	5 000	---	--	---	---	0.376	---
YC164	8mm	5 000	---	10 000	20 000	---	0.833	---
TC164	8mm	5 000	---	10 000	20 000	---	1.030	---
YC158	8mm	5 000	---	---	20 000	---	0.855	---
YC248	12mm	5 000	4 000	---	---	---	0.885	---
YC324	12mm	---	4 000	---	---	---	2.703	---
YC358	12mm	---	4 000	---	---	---	3.333	---

12NC Ordering information

The first 8 or 9 digits of the 12 digit catalogue number are given under section “Phycomp worldwide - Traditional type” on following pages.
The remaining 4 or 3 digits represent the resistance value with the last digit indicating the multiplier as shown in table on the right.

Example:

0.001 Ω = 0010 or 010
0.02 Ω = 0200 or 200
0.3 Ω = 3007 or 307
1 Ω = 1008 or 108
33 kΩ = 3303 or 333
10 MΩ = 1006 or 106

Last digit of 12NC	
Resistance	Last digit
0.001 to 0.0976 Ω	0
0.1 to 0.976 Ω	7
1 to 9.76 Ω	8
10 to 97.6 Ω	9
100 to 976 Ω	1
1 to 9.76 kΩ	2
10 to 97.6 kΩ	3
100 to 976 kΩ	4
1 to 9.76 MΩ	5
10 to 97.6 MΩ	6

Thick film general purpose chip resistors, 01005 to 2512

Features

- Extremely thin and light
- Highly reliable multilayer electrode construction
- Compatible with all soldering processes
- Highly stable in auto-placement surface mounting applications
- Barrier layer end termination
- Jumper is available
- Available in 8mm tape & reel per IEC 60286-3 (EIA -RS 481)

Derating curve

Maximum dissipation (P) in percentage of rated power as a function of the operating ambient temperature (T_{amb}).

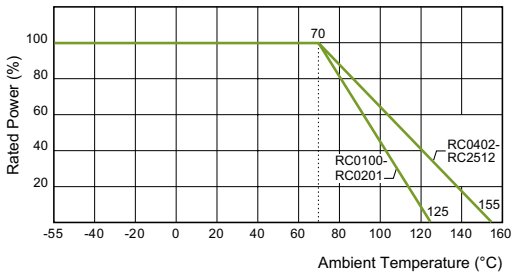

Construction

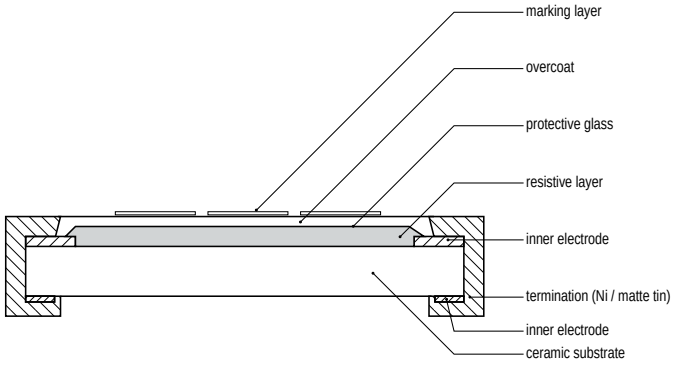

Dimensions

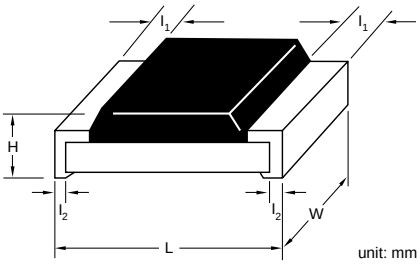

Type	L	W	H	l_1	l_2
RC0100	0.40 ±0.02	0.20 ±0.02	0.13 ±0.02	0.10 ±0.03	0.10 ±0.03
RC0201	0.60 ±0.03	0.30 ±0.03	0.23 ±0.03	0.10 ±0.05	0.15 ±0.05
RC0402	1.00 ±0.05	0.50 ±0.05	0.35 ±0.05	0.20 ±0.10	0.25 ±0.10
RC0603	1.60 ±0.10	0.80 ±0.10	0.45 ±0.10	0.25 ±0.15	0.25 ±0.15
RC0805	2.00 ±0.10	1.25 ±0.10	0.50 ±0.10	0.35 ±0.20	0.35 ±0.20
RC1206	3.10 ±0.10	1.60 ±0.10	0.55 ±0.10	0.45 ±0.20	0.40 ±0.20
RC1210	3.10 ±0.10	2.60 ±0.15	0.50 ±0.10	0.45 ±0.15	0.50 ±0.20
RC1218	3.10 ±0.10	4.60 ±0.10	0.55 ±0.10	0.45 ±0.20	0.40 ±0.20
RC2010	5.00 ±0.10	2.50 ±0.15	0.55 ±0.10	0.45 ±0.15	0.50 ±0.20
RC2512	6.35 ±0.10	3.10 ±0.15	0.55 ±0.10	0.60 ±0.20	0.50 ±0.20

Thick film general purpose chip resistors, 01005 to 2512

Electrical characteristics											
Type	Power P_{70}	Operating Temp. range	MWV	RCOV	DWV	Resistance range & tolerance		T. C. R. (ppm/°C)		Jumper criteria (unit: A)	
RC0100	1/32W	-55°C to +125°C	15V	30V	30V	E24 ±1%, 5% Jumper	10Ω≤R≤1MΩ <50mΩ	10Ω≤R≤1MΩ	±250	Rated current Max. current	0.5 1.0
RC0201	1/20W	-55°C to +125°C	25V	50V	50V	E24 ±5% E24/E96 ±1% E24/E96 ±0.5% Jumper	1Ω≤R≤10MΩ 1Ω≤R≤10MΩ 10Ω≤R≤1MΩ <50mΩ	10Ω<R≤10MΩ 1Ω≤R≤10Ω	±200 -100/+350	Rated current Max. current	0.5 1.0
RC0402	1/16W	-55°C to +155°C	50V	100V	100V	E24 ±5% E24/E96 ±1% E24/E96 ±0.5% Jumper	1Ω≤R≤22MΩ 1Ω≤R≤10MΩ 10Ω≤R≤1MΩ <50mΩ	1Ω≤R≤10Ω 10Ω<R≤10MΩ 10MΩ<R≤22MΩ	±200 ±100 ±200	Rated current Max. current	1.0 2.0
RC0603	1/10W	-55°C to +155°C	50V	100V	100V					Rated current Max. current	1.0 2.0
	1/5W	-55°C to +155°C	50V	100V	100V	E24 ±5% E24/E96 ±1% Jumper	1Ω≤R≤1KΩ 1Ω≤R≤1KΩ <50mΩ	1Ω≤R≤10KΩ	±200	Rated current Max. current	1.0 2.0
RC0805	1/8W	-55°C to +155°C	150V	300V	300V	E24 ±5% E24/E96 ±1% E24/E96 ±0.5% Jumper	1Ω≤R≤22MΩ 1Ω≤R≤10MΩ 10Ω≤R≤1MΩ <50mΩ	1Ω≤R≤10Ω 10Ω<R≤10MΩ 10MΩ<R≤22MΩ	±200 ±100 ±200	Rated current Max. current	2.0 5.0
	1/4W	-55°C to +155°C	150V	300V	300V	E24 ±5% E24/E96 ±1% Jumper	1Ω≤R≤1MΩ 1Ω≤R≤1MΩ <50mΩ	1Ω≤R≤1MΩ	±200	Rated current Max. current	2.0 5.0
RC1206	1/4W	-55°C to +155°C	200V	400V	500V	E24 ±5% E24/E96 ±1% E24/E96 ±0.5% Jumper	10Ω≤R≤22MΩ 1Ω≤R≤10MΩ 10Ω≤R≤1MΩ <50mΩ	1Ω≤R≤10Ω 10Ω<R≤10MΩ 10MΩ<R≤22MΩ	±200 ±100 ±200	Rated current Max. current	2.0 10.0
	1/2W	-55°C to +155°C	200V	400V	500V	E24 ±5% E24/E96 ±1% Jumper	1Ω≤R≤1MΩ 1Ω≤R≤1MΩ <50mΩ	1Ω≤R≤1MΩ	±200	Rated current Max. current	3.0 7.5
RC1210	1/2W	-55°C to +155°C	200V	500V	500V	E24 ±5% E24/E96 ±1% E24/E96 ±0.5% Jumper	1Ω≤R≤22MΩ 1Ω≤R≤10MΩ 10Ω≤R≤1MΩ <50mΩ	1Ω≤R≤10Ω 10Ω<R≤10MΩ 10MΩ<R≤22MΩ	±200 ±100 ±200	Rated current Max. current	2.0 10.0
RC1218	1W	-55°C to +155°C	200V	500V	500V	E24 ±5% E24/E96 ±1% E24/E96 ±0.5% Jumper	1Ω≤R≤1MΩ 1Ω≤R≤1MΩ 10Ω≤R≤1MΩ <20mΩ			Rated current Max. current	6.0 10.0
RC2010	3/4W	-55°C to +155°C	200V	500V	500V	E24 ±5% E24/E96 ±1% E24/E96 ±0.5% Jumper	1Ω≤R≤22MΩ 1Ω≤R≤10MΩ 10Ω≤R≤1MΩ <50mΩ			Rated current Max. current	2.0 10.0
RC2512	1W	-55°C to +155°C	200V	500V	500V					Rated current Max. current	2.0 10.0
	2W	-55°C to +155°C	200V	400V	500V	E24 ±5% E24/E96 ±1% Jumper	1Ω≤R≤150Ω 1Ω≤R≤150Ω <50mΩ	1Ω≤R≤150Ω	±200	Rated current Max. current	6.0 15.0

Environmental characteristics				
Performance test		Test method	Procedure	Requirements
Life		MIL-STD-202G-method 108A	1 000 hours at 70 ±5°C applied RCWV 1.5 hours on, 0.5 hours off, still air required	01005: ±(3% +0.05Ω) < 100mΩ for jumper Others: ±(1% +0.05Ω) for 1% tol. ±(3% +0.05Ω) for 5% tol. < 100mΩ for jumper
High temperature exposure		MIL-STD-202G-method 108A	1 000 hours at maximum operating temperature depending on specification, unpowered	01005: ±(1% +0.05Ω) < 50mΩ for jumper Others: ±(1% +0.05Ω) for 1% tol. ±(2% +0.05Ω) for 5% tol. < 50mΩ for jumper
Moisture resistance		MIL-STD-202G-method 106F	Each temperature / humidity cycle is defined as 8 hours (method 106F), 3 cycles / 24 hours for 10d with 25°C / 65°C 95% R.H	01005: ±(2.0% +0.05Ω) < 100mΩ for jumper Others: ±(0.5% +0.05Ω) for 1% tol. ±(2% +0.05Ω) for 5% tol. < 100mΩ for jumper
Thermal shock		MIL-STD-202G-method 107G	LCT / UCT, number of cycles required is 300 Maximum transfer time is 20 seconds	01005: ±(1% +0.05Ω) < 50mΩ for jumper Others: ±(0.5% +0.05Ω) for 1% tol. ±(1% +0.05Ω) for 5% tol. < 50mΩ for jumper
Solderability	Wetting	J-STD-002B testB	Electrical test not required. Magnification 50X Lead-free solder bath at 245 ±3°C Dipping time: 3 ±0.5 seconds	Well tinned (≥95% covered) No visible damage
	Resistance to soldering heat	MIL-STD-202G-method 210F	Lead-free solder, 260°C, 10 seconds immersion time	01005: ±(1% +0.05Ω) < 50mΩ for jumper Others: ±(0.5% +0.05Ω) for 1% tol. ±(1% +0.05 Ω) for 5% tol. < 50mΩ for jumper No visible damage
Short time overload		MIL-R-55342-D-para 4.7.5	2.5 times RCWV or maximum overload voltage whichever is less for 5 seconds at room temperature	01005: ±(2% +0.05Ω) < 50mΩ for jumper Others: ±(1% +0.05Ω) for 1% tol. ±(2% +0.05Ω) for 5% tol. < 50mΩ for jumper No visible damage

Global part number - Preferred type for ordering Yageo / Phycomp branded products

Ordering example: RC0402JR-07100KL

RC 0402 J R — 07 100K L

Series name (code 1-2)
RC = General purpose thick film

Size code (code 3-6)
(inch / metric)
0100 = 0.4 x 0.2
0201 = 0.6 x 0.3
0402 = 1.0 x 0.5
0603 = 1.6 x 0.8
0805 = 2.0 x 1.25
1206 = 3.2 x 1.6
1210 = 3.2 x 2.6
1218 = 3.2 x 4.5
2010 = 5.0 x 2.5
2512 = 6.35 x 3.2

Tolerance (code 7)
D = ±0.5%
F = ±1%
J = ±5% (for Jumper ordering)

Default code(1/2) (code 17)

Resistance (code 12-16)
0R = Jumper
10R = 10Ω
100R = 100Ω
100K = 100KΩ

Taping reel (code 10-11)
07 = 7 inch Dia. reel
10 = 10 inch Dia. reel
13 = 13 inch Dia. reel
7D = 7 inch Dia. reel, 2 x standard quantity
7W = 7 inch Dia. reel, 2 x standard power

T. C. R. (code 9)
"—" = Based on spec.
(— for thick film only)

Packing style (code 8)
R = Paper tape reel
K = Embossed plastic tape reel
C = Bulk cassette
S = ESD safe reel

Note: 1. All of our RSMD products are RoHS compliant. "LFP" of the internal 2D reel label mentions "Lead Free Process"
2. Letter L is system default code for ordering only

Phycomp worldwide - Traditional type									
General purpose thick film / RC series									
Size: inch (mm)		**0201 (0603)**		**0402 (1005)**		**0603 (1608)**		**0805 (2012)**	
Power		1/20 W		1/16 W		1/10 W		1/8 W	
Tolerance		+5%	+1%	+5%	+1%	+5%	+1%	+5%	+1%
Resistance		E24	E24 / E96	E24	E24 / E96	E24	E24 / E96	E24	E24 / E96
Packing		paper tape		paper tape		paper tape		paper tape	
Quantity	5 000	---	---	---	---	2322 702 60...L	2322 704 6....L	2322 730 61...L	2322 734 6....L
	10 000	2322 803 70...L	2322 806 7....L	2322 705 70...L	2322 706 7....L	2322 702 70...L	2322 704 7....L	2322 730 71...L	2322 734 7....L
	20 000	2322 806 80...L	2322 806 8....L	---	---	2322 702 81...L	2322 704 8....L	2322 730 81...L	2322 734 8....L
	50 000	2322 803 60...L	2322 806 6....L	2322 705 87...L	2322 706 8....L	---	---	---	---
Jumper	5 000	---	---	---	---	2322 702 96001L	---	2322 730 91002L	---
	10 000	2322 803 91001L	---	2322 705 91001L	---	2322 702 97001L	---	2322 730 91003L	---
	20 000	---	---	---	---	2322 702 92002L	---	2322 730 92002L	---
	50 000	---	---	2322 705 91007L	---	---	---	---	---

For ordering rules: See page 14 for E24 / E96 values and the last 4 or 3 digits of the 12NC catalogue number

Phycomp worldwide - Traditional type											
General purpose thick film / RC series											
Size: inch (mm)		**1206 (3216)**		**1210 (3225)**		**1218 (3248)**		**2010 (5025)**		**2512 (6432)**	
Power		1/4 W		1/2 W		1 W		3/4 W		1 W	
Tolerance		+5%	+1%	+5%	+1%	+5%	+1%	+5%	+1%	+5%	+1%
Resistance		E24	E24 / E96	E24	E24 / E96	E24	E24 / E96	E24	E24 / E96	E24	E24 / E96
Packing		paper tape		paper tape		blister tape		blister tape		blister tape	
Quantity	4 000	---	---	---	---	2322 735 64...L	2322 735 7....L	2322 760 60...L	2322 761 6....L	2322 762 60...L	2322 763 6....L
	5 000	2322 711 61...L	2322 724 6....L	2390 735 70...L	2390 735 3....L	---	---	---	---	---	---
	10 000	2322 711 51...L	2322 724 7....L	---	---	---	---	---	---	---	---
	20 000	2322 711 81...L	2322 724 8....L	2390 735 71...L	2390 735 5....L	---	---	---	---	---	---
Jumper	4 000	---	---	---	---	2322 735 90007L	---	2322 760 90003L	---	2322 762 90000L	---
	5 000	2322 711 91032L	---	2390 735 90001L	---	---	---	---	---	---	---
	10 000	2322 711 91005L	---	---	---	---	---	---	---	---	---
	20 000	2322 711 92004L	---	---	---	---	---	---	---	---	---

For ordering rules: See page 14 for E24 / E96 values and the last 4 or 3 digits of the 12NC catalogue number

Phycomp CTC ordering code - Traditional type - North America
Regional code for ordering Phycomp branded products. Please see page 13 for details.

Thick film high ohmic chip resistors, 0805 / 1206

Features

- Reduced size of final equipment
- Low assembly costs
- Higher component and equipment reliability
- High ohmic values up to 100MΩ
- Suitable for power supplies in small equipment

Derating curve

Maximum dissipation (P) in percentage of rated power as a function of the operating ambient temperature (T_{amb}).

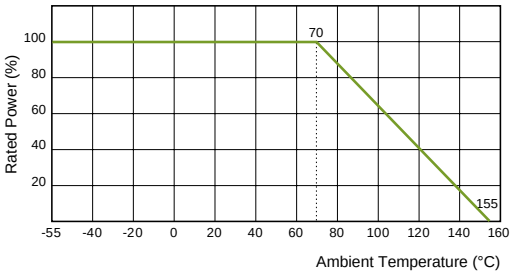

Construction

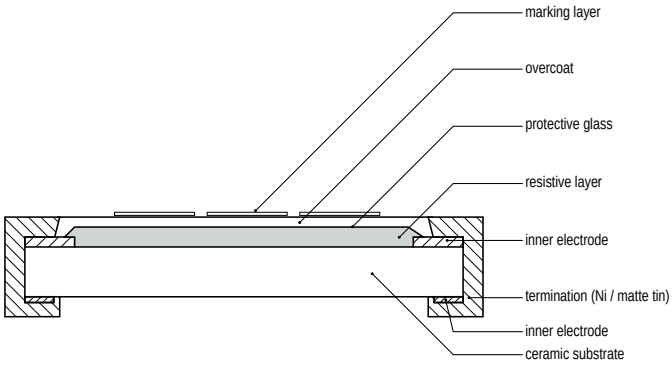

Dimensions

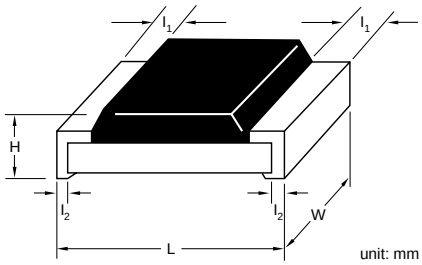

Type	L	W	H	l_1	l_2
RC0805	2.00 ±0.10	1.25 ±0.10	0.50 ±0.10	0.35 ±0.20	0.35 ±0.20
RC1206	3.10 ±0.10	1.60 ±0.10	0.55 ±0.10	0.45 ±0.20	0.40 ±0.20

Electrical characteristics								
Type	Power P_{70}	Operating Temp. range	MWV	RCOV	DWV	Resistance range & tolerance		T. C. R.
RC0805	1/8W	-55°C to +155°C	150V	300V	300V	E24 ±5%, ±10%, ±20%	24MΩ ≤ R ≤ 100MΩ	±300 ppm/°C
RC1206	1/4W	-55°C to +155°C	200V	400V	500V			

Note: See page 11 for ordering code. For more detailed, please contact our sales offices, distributors and representatives in your region.

Environmental characteristics				
Performance test		Test method	Procedure	Requirements
Life		MIL-STD-202G-method 108A	1 000 hours at 70 ±5°C applied RCWV 1.5 hours on, 0.5 hours off, still air required	±(2% +0.05Ω)
High temperature exposure		MIL-STD-202G-method 108A	1 000 hours at maximum operating temperature depending on specification, unpowered	±(1% +0.05Ω)
Moisture resistance		MIL-STD-202G-method 106F	Each temperature / humidity cycle is defined as 8 hours (method 106F), 3 cycles / 24 hours for 10d with 25°C / 65°C 95% R.H	±(2% +0.05Ω)
Thermal shock		MIL-STD-202G-method 107G	LCT / UCT, number of cycles required is 300 Maximum transfer time is 20 seconds	±(1% +0.05Ω)
Solderability	Wetting	J-STD-002B testB	Electrical test not required. Magnification 50X Lead-free solder bath at 245 ±3°C Dipping time: 3 ±0.5 seconds	Well tinned (≥95% covered) No visible damage
	Resistance to soldering heat	MIL-STD-202G-method 210F	Lead-free solder, 260°C, 10 seconds immersion time	±(1% +0.05Ω) No visible damage
Short time overload		MIL-R-55342-D-para 4.7.5	2.5 times RCWV or maximum overload voltage whichever is less for 5 seconds at room temperature	±(2% +0.05Ω) No visible damage

Thick film precision grade chip resistors, 0402 to 1206

Features

- Narrow tolerance
- Low T. C. R.
- Highly reliable multilayer electrode construction
- Compatible with all soldering processes
- Suitable for auto-placement surface mounting applications
- Available in 8mm tape & reel per EIA RS481

Derating curve

Maximum dissipation (P) in percentage of rated power as a function of the operating ambient temperature (T_{amb}).

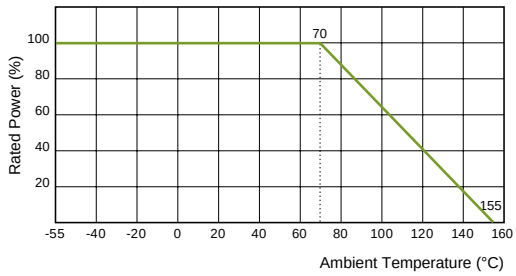

Construction

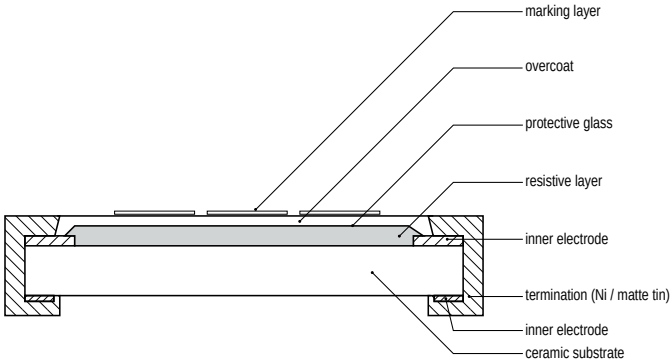

Dimensions

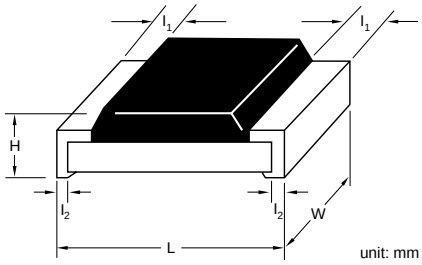

Type	L	W	H	l_1	l_2
RE0402	1.00 ±0.05	0.50 ±0.05	0.32 ±0.05	0.20 ±0.10	0.25 ±0.10
RE0603	1.60 ±0.10	0.80 ±0.10	0.45 ±0.10	0.25 ±0.15	0.25 ±0.15
RE0805	2.00 ±0.10	1.25 ±0.10	0.50 ±0.10	0.35 ±0.20	0.35 ±0.20
RE1206	3.10 ±0.10	1.60 ±0.10	0.55 ±0.10	0.45 ±0.20	0.40 ±0.20

Thick film precision grade chip resistors, 0402 to 1206

Electrical characteristics								
Type	Power P_{70}	Operating Temp. range	MWV	RCOV	DWV	Resistance range & tolerance		T. C. R.
RE0402	1/16W	-55°C to +155°C	50V	100V	100V	E24/E96 ±0.5%, ±1%	10Ω ≤ R ≤ 1MΩ	±50 ppm/°C
RE0603	1/10W	-55°C to +155°C	50V	100V	100V			
RE0805	1/8W	-55°C to +155°C	150V	300V	300V			
RE1206	1/4W	-55°C to +155°C	200V	400V	500V			

Environmental characteristics				
Performance test		Test method	Procedure	Requirements
Life		MIL-STD-202G-method 108A	1 000 hours at 70 ±5°C applied RCWV 1.5 hours on, 0.5 hours off, still air required	±(3% +0.05Ω)
High temperature exposure		MIL-STD-202G-method 108A	1 000 hours at maximum operating temperature depending on specification, unpowered	±(3% +0.05Ω)
Moisture resistance		MIL-STD-202G-method 106F	Each temperature / humidity cycle is defined as 8 hours (method 106F), 3 cycles / 24 hours for 10d with 25°C / 65°C 95% R.H	±(3% +0.05Ω)
Thermal shock		MIL-STD-202G-method 107G	LCT / UCT, number of cycles required is 300 Maximum transfer time is 20 seconds	±(1% +0.05Ω)
Solderability	Wetting	IPC/JEDECJ-STD-002B testB	Electrical test not required. Magnification 50X Lead-free solder bath at 245 ±3°C Dipping time: 3 ±0.5 seconds	Well tinned (≥95% covered) No visible damage
	Resistance to soldering heat	MIL-STD-202G-method 210F	Lead-free solder, 260°C, 10 seconds immersion time	±(0.5%+ 0.05Ω) No visible damage
Short time overload		MIL-R-55342-D-para 4.7.5	2.5 times RCWV or maximum overload voltage whichever is less for 5 seconds at room temperature	±(1%+ 0.05Ω) No visible damage

Global part number - Preferred type for ordering Yageo / Phycomp branded products

Ordering example: RE0603DRE07100KL

RE 0603 D R E 07 100K L

Series name (code 1-2)
RE = Thick film precision grade

Size code (code 3-6)
(inch / metric)
0402 = 1.0 x 0.5
0603 = 1.6 x 0.8
0805 = 2.0 x 1.25
1206 = 3.2 x 1.6

Tolerance (code 7)
D = ±0.5%
F = ±1%
J = ±5%

Default code(1/2) (code 17)

Resistance (code 12-16)
10R = 10Ω
100R = 100Ω
100K = 100KΩ

Taping reel (code 10-11)
07 = 7 inch Dia. reel
10 = 10 inch Dia. reel
13 = 13 inch Dia. reel

T. C. R. (code 9)
E = ±50 ppm/°C

Packing style (code 8)
R = Paper tape reel

Note: 1. All of our RSMD products are RoHS compliant. "LFP" of the internal 2D reel label mentions "Lead Free Process"
2. Letter L is system default code for ordering only
3. RE series products are available by "Global part number" only

Phycomp CTC ordering code - Traditional type - North America

Regional code for ordering Phycomp branded products. Please see page 13 for details.

Features

RT series

- High precision - High stability
- Low T. C. R. / low noise
- High accuracy (±0.05%, ±0.1%, ±0.25%, ±0.5%, ±1%)

RJ series

- General purpose
- T. C. R.: ±50 ppm/°C
- Tolerance: ±1%

Derating curve

Maximum dissipation (P) in percentage of rated power as a function of the operating ambient temperature (T_{amb}).

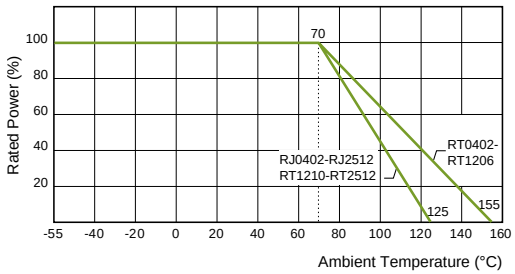

Construction

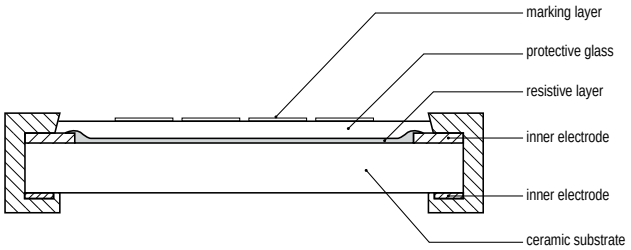

Dimensions

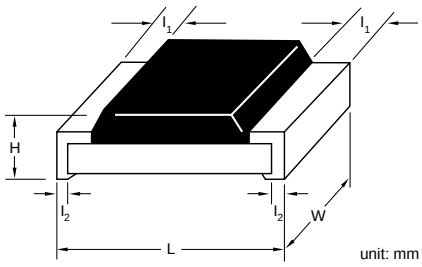

Type	L	W	H	I_1	I_2
RT / RJ0402	1.00 ±0.10	0.50 ±0.05	0.30 ±0.05	0.20 ±0.10	0.25 ±0.10
RT / RJ0603	1.60 ±0.10	0.80 ±0.10	0.45 ±0.10	0.25 ±0.15	0.25 ±0.15
RT / RJ 0805	2.00 ±0.10	1.25 ±0.10	0.50 ±0.10	0.35 ±0.20	0.35 ±0.20
RT / RJ1206	3.10 ±0.10	1.60 ±0.10	0.55 ±0.10	0.45 ±0.20	0.40 ±0.20
RT / RJ1210	3.10 ±0.10	2.60 ±0.15	0.55 ±0.10	0.50 ±0.20	0.50 ±0.20
RT / RJ2010	5.00 ±0.10	2.50 ±0.15	0.55 ±0.10	0.60 ±0.20	0.50 ±0.20
RT / RJ2512	6.35 ±0.10	3.20 ±0.15	0.55 ±0.10	0.60 ±0.20	0.50 ±0.20

Thin film high precision high stability chip resistors, 0402 to 2512

Electrical characteristics								
Type	Power P_{70}	Operating Temp. range	MWV	RCOV	DWV	Resistance range & tolerance		T. C. R.
RT0402	1/16W	-55°C to +155°C	50V	100V	75V	E24/E96 ±0.05%, ±0.1%, ±0.25%, ±0.5%, ±1%	10Ω ≤ R ≤ 121KΩ	±50 ppm/°C ±25 ppm/°C ±15 ppm/°C ±10 ppm/°C
RT0603	1/10W		75V	150V	100V		5.1Ω ≤ R ≤ 681KΩ	
RT0805	1/8W		150V	300V	200V		5.1Ω ≤ R ≤ 1.5MΩ	
RT1206	1/4W		200V	400V	300V			
RT1210	1/4W	-55°C to +125°C	200V	400V	400V		5.1Ω ≤ R ≤ 1MΩ	
RT2010	1/2W		200V	400V	400V		10Ω ≤ R ≤ 1MΩ	
RT2512	3/4W		200V	400V	400V			
RJ0402	1/16W		25V	100V	100V	E24/E96 ±1%	10Ω ≤ R ≤ 121KΩ	±50 ppm/°C
RJ0603	1/16W		50V	100V	100V		5.1Ω ≤ R ≤ 681KΩ	
RJ0805	1/10W		100V	200V	250V		5.1Ω ≤ R ≤ 1.5MΩ	
RJ1206	1/8W		150V	250V	250V			
RJ1210	1/4W		150V	300V	400V		10Ω ≤ R ≤ 1MΩ	
RJ2010	1/2W		150V	300V	400V			
RJ2512	3/4W		150V	300V	400V			

Environmental characteristics				
Performance test		Test method	Procedure	Requirements
Life		MIL-STD-202G-method 108A	1 000 hours at 70 ±5°C applied RCWV 1.5 hours on, 0.5 hours off, still air required	±(0.5%+ 0.05Ω) for RT ±(1%+ 0.05Ω) for RJ
High temperature exposure		MIL-STD-202G-method 108A	1 000 hours at maximum operating temperature depending on specification, unpowered	±(0.5%+ 0.05Ω)
Moisture resistance		MIL-STD-202G-method 106F	Each temperature / humidity cycle is defined as 8 hours (method 106F), 3 cycles / 24 hours for 10d with 25°C / 65°C 95% R.H	±(0.5%+ 0.05Ω)
Thermal shock		MIL-STD-202G-method 107G	LCT / UCT, number of cycles required is 300 Maximum transfer time is 20 seconds	±(0.5%+ 0.05Ω)
Short time overload		MIL-R-55342D-para 4.7.5	2.5 times RCWV or maximum overload voltage whichever is less for 5 seconds at room temperature	±(0.5%+ 0.05Ω) for RT ±(1%+ 0.05Ω) for RJ No visible damage
Solderability	Resistance to soldering heat	MIL-STD-202G-method 210F	Lead-free solder, 260°C, 10 seconds immersion time	±(0.5% +0.05Ω) No visible damage
	Wetting	J-STD-002B testB	Electrical test not required. Magnification 50X Lead-free solder bath at 245 ±3°C Dipping time: 3 ±0.5 seconds	Well tinned (≥95% covered) No visible damage

Thin film high precision high stability chip resistors, 0402 to 2512

Global part number - Preferred type for ordering Yageo / Phycomp branded products

Ordering example: RT0603DRE07100KL

RT 0603 D R E 07 100K L

Series name (code 1-2)
RT = High precision - High stability thin film

Size code (code 3-6)
(inch / metric)
0402 = 1.0 x 0.5
0603 = 1.6 x 0.8
0805 = 2.0 x 1.25
1206 = 3.2 x 1.6
1210 = 3.2 x 2.6
2010 = 5.0 x 2.5
2512 = 6.35 x 3.2

Tolerance (code 7)
W = ±0.05%
B = ±0.1%
C = ±0.25%
D = ±0.5%
F = ±1%

Default code (1/2) (code 17)

Resistance (code 12-16)
10R = 10Ω
100R = 100Ω
10K = 10KΩ
100K = 100KΩ

Taping reel (code 10-11)
07 = 7 inch Dia. reel
10 = 10 inch Dia. reel
13 = 13 inch Dia. reel

T. C. R. (code 9)
B = ±10 ppm/°C (on request)
C = ±15 ppm/°C (on request)
D = ±25 ppm/°C
E = ±50 ppm/°C

Packing style (code 8)
R = Paper tape reel
K = Embossed plastic tape reel

Note: 1. All of our RSMD products are RoHS compliant. "LFP" of the internal 2D reel label mentions "Lead Free Process"
2. Letter L is system default code for ordering only

Phycomp worldwide - Traditional type									
High precision - High stability									
Size: inch (mm)		**0402 (1005)**				**0603 (1608)**			
Power		1/16 W				1/10 W			
Tolerance		±1%	±0.5%	±0.25%	±0.1%	±1%	±0.5%	±0.25%	±0.1%
Resistance		E24 / E96				E24 / E96			
Packing		paper tape				paper tape			
Quantity	**TC25** 5 000	---	---	---	---	2390 604 7....L	2390 604 6....L	2390 604 5....L	2390 604 4....L
	TC50 5 000	---	---	---	---	2390 404 7....L	2390 404 6....L	2390 404 5....L	2390 404 4....L
	TC25 10 000	2390 607 7....L	2390 607 6....L	2390 607 5....L	2390 607 4....L	---	---	---	---
	TC50 10 000	2390 407 7....L	2390 407 6....L	2390 407 5....L	2390 407 4....L	---	---	---	---

For ordering rules: See page 14 for E24 / E96 values and the last 4 or 3 digits of the 12NC catalogue number

Phycomp worldwide - Traditional type														
High precision - High stability														
Size: inch (mm)		**0805 (2012)**				**1206 (3216)**				**1210 (3225)**				
Power		1/8 W				1/4 W				1/2 W				
Tolerance		±1%	±0.5%	±0.25%	±0.1%	±1%	±0.5%	±0.25%	±0.1%	±1%	±0.5%	±0.25%	±0.1%	
Resistance		E24 / E96				E24 / E96				E24 / E96				
Packing		paper tape				paper tape				paper tape				
Quantity	**TC10** 5 000	2390 801 7....L	2390 801 6....L	2390 801 5....L	2390 801 4....L	2390 811 7....L	2390 811 6....L	2390 811 5....L	2390 811 4....L	2390 812 7....L	2390 812 6....L	2390 812 5....L	2390 812 4....L	
	TC15 5 000	2390 701 7....L	2390 701 6....L	2390 701 5....L	2390 701 4....L	2390 711 7....L	2390 711 6....L	2390 711 5....L	2390 711 4....L	2390 712 7....L	2390 712 6....L	2390 712 5....L	2390 712 4....L	
	TC25 5 000	2390 601 7....L	2390 601 6....L	2390 601 5....L	2390 601 4....L	2390 611 7....L	2390 611 6....L	2390 611 5....L	2390 611 4....L	2390 612 7....L	2390 612 6....L	2390 612 5....L	2390 612 4....L	
	TC50 5 000	2390 401 7....L	2390 401 6....L	2390 401 5....L	2390 401 4....L	2390 411 7....L	2390 411 6....L	2390 411 5....L	2390 411 4....L	2390 412 7....L	2390 412 6....L	2390 412 5....L	2390 412 4....L	

For ordering rules: See page 14 for E24 / E96 values and the last 4 or 3 digits of the 12NC catalogue number

Phycomp worldwide - Traditional type									
High precision - High stability									
Size: inch (mm)		**2010 (5025)**				**2512 (6432)**			
Power		1/2 W				3/4 W			
Tolerance		±1%	±0.5%	±0.25%	±0.1%	±1%	±0.5%	±0.25%	±0.1%
Resistance		E24 / E96				E24 / E96			
Packing		blister tape				blister tape			
Quantity	**TC10** 4 000	2390 815 7....L	2390 815 6....L	2390 815 5....L	2390 815 4....L	2390 818 7....L	2390 818 6....L	2390 818 5....L	2390 818 4....L
	TC15 4 000	2390 731 7....L	2390 731 6....L	2390 731 5....L	2390 731 4....L	2390 735 7....L	2390 735 6....L	2390 735 5....L	2390 735 4....L
	TC25 4 000	2390 615 7....L	2390 615 6....L	2390 615 5....L	2390 615 4....L	2390 618 7....L	2390 618 6....L	2390 618 5....L	2390 618 4....L
	TC50 4 000	2390 415 7....L	2390 415 6....L	2390 415 5....L	2390 415 4....L	2390 418 7....L	2390 418 6....L	2390 418 5....L	2390 418 4....L

For ordering rules: See page 14 for E24 / E96 values and the last 4 or 3 digits of the 12NC catalogue number

Phycomp CTC ordering code - Traditional type - North America
Regional code for ordering Phycomp branded products. Please see page 13 for details.

Thin film product range against tolerance / T. C. R. (ordering code)															
Tolerance	±0.05% (W)			±0.1% (B)				±0.25% (C)				±0.5% (D)		±1% (F)
T. C. R. (ppm/°C)	±10 (B)	±15 (C)	±25 (D)	±10 (B)	±15 (C)	±25 (D)	±50 (E)	±10 (B)	±15 (C)	±25 (D)	±50 (E)	±25 (D)	±50 (E)	±50 (E)
RT0402	--	--	--	10R - 100K	10R - 100K	10R - 121K	10R - 121K	10R - 100K	10R - 100K	10R - 121K	10R - 121K	10R - 121K	10R - 121K	10R - 121K
RT0603	1K - 47K	1K - 47K	1K - 47K	10R - 100K	10R - 100K	10R - 681K	10R - 681K	10R - 100K	10R - 100K	10R - 681K	5R1 - 681K	10R - 681K	5R1 - 681K	5R1 - 681K
RT0805	100R - 100K	100R - 100K	100R - 100K	10R - 100K	10R - 100K	10R - 1.5M	10R - 1.5M	10R - 100K	10R - 100K	10R - 1.5M	5R1 - 1.5M	10R - 1.5M	5R1 - 1.5M	5R1 - 1.5M
RT1206	100R - 100K	100R - 100K	100R - 100K	10R - 100K	10R - 100K	10R - 1.5M	10R - 1.5M	10R - 100K	10R - 100K	10R - 1.5M	5R1 - 1.5M	10R - 1.5M	5R1 - 1.5M	5R1 - 1.5M
RT1210	100R - 100K	100R - 100K	100R - 100K	10R - 100K	10R - 100K	10R - 1M	10R - 1M	10R - 100K	10R - 100K	10R - 1M	5R1 - 1M	10R - 1M	5R1 - 1M	5R1 - 1M
RT2010	100R - 100K	100R - 100K	100R - 100K	10R - 100K	10R - 100K	10R - 1M	10R - 1M	10R - 100K	10R - 100K	10R - 1M	10R - 1M	10R - 1M	10R - 1M	10R - 1M
RT2512	100R - 100K	100R - 100K	100R - 100K	10R - 100K	10R - 100K	10R - 1M	10R - 1M	10R - 100K	10R - 100K	10R - 1M	10R - 1M	10R - 1M	10R - 1M	10R - 1M

Global part number - Preferred type for ordering Yageo / Phycomp branded products

Ordering example: RJ0603FRE07100KL

RJ 0603 F R E 07 100K L

Series name (code 1-2)
RJ = General purpose thin film

Size code (code 3-6)
(inch / metric)
0402 = 1.0 x 0.5
0603 = 1.6 x 0.8
0805 = 2.0 x 1.25
1206 = 3.2 x 1.6
1210 = 3.2 x 2.6
2010 = 5.0 x 2.5
2512 = 6.35 x 3.2

Tolerance (code 7)
F = ±1%

Default code (1/2) (code 17)

Resistance (code 12-16)
10R = 10Ω
100R = 100Ω
10K = 10KΩ
100K = 100KΩ

Taping reel (code 10-11)
07 = 7 inch Dia. reel
10 = 10 inch Dia. reel
13 = 13 inch Dia. reel

T. C. R. (code 9)
E = ±50 ppm/°C

Packing style (code 8)
R = Paper tape reel
K = Embossed plastic tape reel

Note: 1. All of our RSMD products are RoHS compliant. "LFP" of the internal 2D reel label mentions "Lead Free Process"
2. Letter L is system default code for ordering only

Phycomp worldwide - Traditional type

General purpose thin film / RJ series

Size: inch (mm)	0402 (1005)	0603 (1608)	0805 (2012)	1206 (3216)	1210 (3225)	2010 (5025)	2512 (6432)
Power	1/16 W	1/16 W	1/10 W	1/8 W	1/4 W	1/2 W	3/4 W
Tolerance	+1%	+1%	+1%	+1%	+1%	+1%	+1%
Resistance	E24 / E96	E24 / E96	E24 / E96	E24 / E96	E24 / E96	E24 / E96	E24 / E96
Packing	paper tape	paper tape	paper tape	paper tape	paper tape	blister tape	blister tape
Quantity 4 000	---	---	---	---	---	2390 415 8....L	2390 418 8....L
5 000	---	2390 404 8....L	2390 401 8....L	2390 411 8....L	2390 412 0....L	---	---
10 000	2390 407 8....L	2391 424 8....L	2391 421 8....L	2391 431 8....L	2391 432 8....L	---	---
20 000	2390 427 8....L	2392 444 8....L	2392 441 8....L	2392 451 8....L	2392 412 8....L	---	---
50 000	2390 447 8....L	---	---	---	---	---	---

For ordering rules: See page 14 for E24 / E96 values and the last 4 or 3 digits of the 12NC catalogue number

Phycomp CTC ordering code - Traditional type - North America

Regional code for ordering Phycomp branded products. Please see page 13 for details.

Thin film product range against tolerance / T. C. R. (ordering code)

Tolerance	±1% (F)
T. C. R. (ppm/°C)	±50 (E)
RJ0402	10R - 121K
RJ0603	5R1 - 681K
RJ0805	5R1 - 1.5M
RJ1206	5R1 - 1.5M
RJ1210	10R - 1M
RJ2010	10R - 1M
RJ2512	10R - 1M

Thick film low ohmic chip resistors, 0402 to 2512

Features

- Current sensing of desktop & notebook PC
- Resistance values down to 0.01Ω
- Highly reliable multilayer electrode construction
- Low inductance
- High speed logic circuits

Derating curve

Maximum dissipation (P) in percentage of rated power as a function of the operating ambient temperature (T_{amb}).

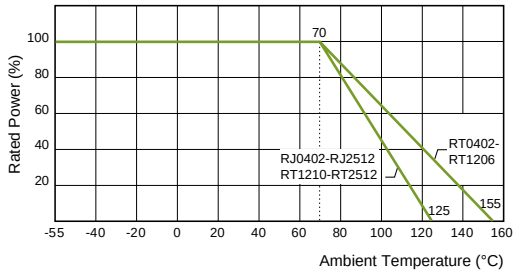

Construction

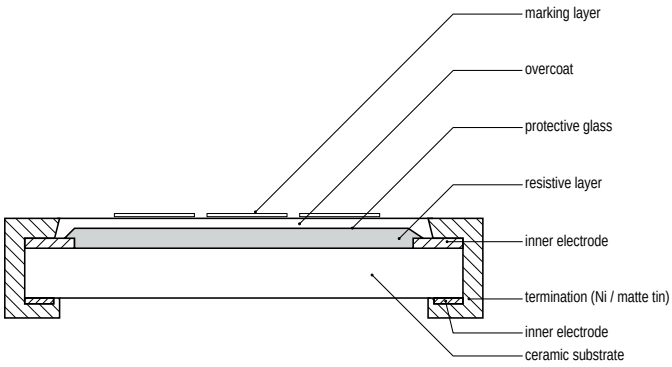

Dimensions

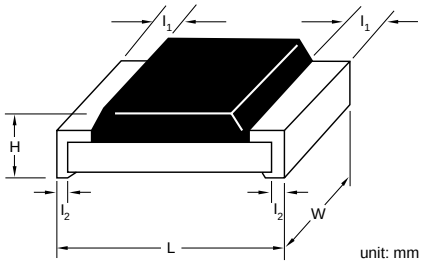

Type	L	W	H	l_1	l_2
RL0402	1.00 ±0.10	0.50 ±0.05	0.35 ±0.05	0.20 ±0.10	0.25 ±0.10
RL0603	1.60 ±0.10	0.80 ±0.10	0.45 ±0.10	0.25 ±0.15	0.25 ±0.15
RL0805	2.00 ±0.10	1.25 ±0.10	0.50 ±0.10	0.35 ±0.20	0.35 ±0.20
RL1206	3.10 ±0.10	1.60 ±0.10	0.55 ±0.10	0.45 ±0.20	0.45±0.20
RL1210	3.10 ±0.10	2.60 ±0.15	0.55 ±0.10	0.50 ±0.20	0.50 ±0.20
RL1218	3.05 ±0.15	4.60 ±0.20	0.55 ±0.10	0.45 ±0.25	0.50 ±0.25
RL2010	5.00 ±0.10	2.50 ±0.15	0.55 ±0.10	0.60 ±0.20	0.50 ±0.20
RL2512	6.35 ±0.10	3.20 ±0.15	0.55 ±0.10	0.60 ±0.20	0.50 ±0.20

Thick film low ohmic chip resistors, 0402 to 2512

Electrical characteristics					
Type	Power P_{70}	Operating Temp. range	Resistance range & tolerance		T. C. R. (ppm/°C)
RL0402	1/16W	-55°C to +125°C	E24 ±1%, ±2%, ±5%	50mΩ ≤ R < 1Ω	See following table "T.C.R.- RL series"
RL0603	1/10W	-55°C to +125°C		10mΩ ≤ R < 1Ω	
RL0805	1/8W	-55°C to +125°C		10mΩ ≤ R < 1Ω	
	1/4W	-55°C to +125°C		15mΩ ≤ R < 1Ω	
RL1206	1/4W	-55°C to +125°C		10mΩ ≤ R < 1Ω	
	1/2W	-55°C to +125°C		15mΩ ≤ R < 1Ω	
RL1210	1/2W	-55°C to +125°C		10mΩ ≤ R < 1Ω	
RL1218	1W	-55°C to +125°C		10mΩ ≤ R < 1Ω	
RL2010	3/4W	-55°C to +125°C		10mΩ ≤ R < 1Ω	
RL2512	1W	-55°C to +125°C		10mΩ ≤ R < 1Ω	

Note: The partial values of 25 / 40 / 50 / 60 / 250 / 400 / 500 mΩ are also available

T. C. R. - RL series								
Type	Operating Temp. range	Resistancec range	T. C. R.					
			50mΩ≤R<100mΩ		100mΩ≤R<500mΩ		500mΩ≤R<1Ω	
RL0402	-55°C to +125°C	50mΩ≤R<1Ω	±1000 ppm/°C		±800 ppm/°C		±300 ppm/°C	
			10mΩ≤R≤36mΩ	36mΩ≤R≤91mΩ	91mΩ<R≤500mΩ		500mΩ<R<1Ω	
RL0603	-55°C to +125°C	10mΩ≤R<1Ω	±1 500 ppm/°C	±1 200 ppm/°C	±800 ppm/°C		±300 ppm/°C	
			10mΩ≤R≤18mΩ	18mΩ<R≤47mΩ	47mΩ<R≤91mΩ	91mΩ<R≤360mΩ	360mΩ<R≤500mΩ	500mΩ<R<1Ω
RL0805	-55°C to +125°C	10mΩ≤R<1Ω	±1 500 ppm/°C	±1 200 ppm/°C	±1 000 ppm/°C	±600 ppm/°C	±300 ppm/°C	±200 ppm/°C
RL1206								
RL1210	-55°C to +125°C	10mΩ≤R<1Ω	±1 500 ppm/°C	±1 000 ppm/°C	±800 ppm/°C	±600 ppm/°C	±300 ppm/°C	±200 ppm/°C
			10mΩ≤R≤30mΩ	30mΩ<R≤56mΩ	56mΩ<R≤180mΩ	180mΩ<R<1Ω		
RL1218	-55°C to +125°C	10mΩ≤R<1Ω	±2 000 ppm/°C	±1 000 ppm/°C	±700 ppm/°C	±250 ppm/°C		
			10mΩ≤R≤18mΩ	18mΩ<R≤47mΩ	47mΩ<R≤91mΩ	91mΩ<R≤360mΩ	360mΩ<R≤500mΩ	500mΩ<R<1Ω
RL2010	-55°C to +125°C	10mΩ≤R<1Ω	±1 500 ppm/°C	±1 200 ppm/°C	±1 000 ppm/°C	±600 ppm/°C	±300 ppm/°C	±200 ppm/°C
RL2512			±1 500 ppm/°C	±1 000 ppm/°C	±800 ppm/°C	±600 ppm/°C	±300 ppm/°C	±200 ppm/°C

Environmental characteristics				
Performance test		Test method	Procedure	Requirements
Life		MIL-STD-202G-method 108A	1 000 hours at 70°C ±5°C applied RCWV 1.5 hours on, 0.5 hours off, still air required	±2%
High temperature exposure		MIL-STD-202G-method 108A	1 000 hours at maximum operating temperature depending on specification, unpowered	±1%
Moisture resistance		MIL-STD-202G-method 106F	Each temperature / humidity cycle is defined as 8 hours (method 106F), 3 cycles / 24 hours for 10d with 25°C / 65°C 95% R.H	±2%
Thermal shock		MIL-STD-202G-method 107G	LCT / UCT, number of cycles required is 300 Maximum transfer time is 20 seconds	±1%
Solderability	Wetting	J-STD-002B testB	Electrical test not required. Magnification 50X Lead-free solder bath at 245 ±3°C Dipping time: 3 ±0.5 seconds	Well tinned (≥95% covered) No visible damage
	Resistance to soldering heat	MIL-STD-202G-method 210F	Lead-free solder, 260°C, 10 seconds immersion time	±1% No visible damage
Short time overload		MIL-R-55342-D-para 4.7.5	RL standard power: 6.25 times of rated power for 5 seconds at room temperature RL high power: 5 times of rated power for 5 seconds at room temperature	±2% No visible damage

Thick film low ohmic chip resistors, 0402 to 2512

Global part number - Preferred type

Ordering example: RL0603JR-070R01L

RL 0603 J R — 07 0R01 L

Series name (code 1-2)
- RL = Thick Film Low ohmic

Size code (code 3-6)
(inch / metric)
- 0402 = 1.0 x 0.5
- 0603 = 1.6 x 0.8
- 0805 = 2.0 x 1.25
- 1206 = 3.2 x 1.6
- 1210 = 3.2 x 2.6
- 1218 = 3.2 x 4.5
- 2010 = 5.0 x 2.5
- 2512 = 6.35 x 3.2

Tolerance (code 7)
- F = ±1%
- G = ±2%
- J = ±5%

Default code(1/2) (code 17)

Resistance (code 12-16)
- 0R01 = 0.01Ω
- 0R1 = 0.1Ω
- 0R2 = 0.2Ω

Taping reel (code 10-11)
- 07 = 7 inch Dia. reel
- 10 = 10 inch Dia. reel
- 13 = 13 inch Dia. reel

T. C. R. (code 9)
- "—" = Based on spec.
- (— for thick film only)

Packing style (code 8)
- R = Paper tape reel
- K = Embossed plastic tape reel

Note: 1. All of our RSMD products are RoHS compliant. "LFP" of the internal 2D reel label mentions "Lead Free Process"
2. Letter L is system default code for ordering only

Phycomp worldwide - Traditional type								
Low ohmic chip resistors								
Size: inch (mm)	**0402 (1005)**		**0603 (1608)**		**0805 (2012)**		**1206 (3216)**	
Power	1/16 W		1/10 W		1/8 W		1/4 W	
Tolerance	+5%	+1%	+5%	+1%	+5%	+1%	+5%	+1%
Resistance	E24	E24	E24	E24	E24	E24	E24	E24
Packing	paper tape		paper tape		paper tape		paper tape	
Quantity 5 000	---	---	2350 512 10…L	2350 512 12…L	2350 511 10…L	2350 511 12…L	2350 510 10…L	2350 510 12…L
10 000	2350 513 20…L	2350 513 22…L	---	---	---	---	---	---

For ordering rules: See page 14 for E24 / E96 values and the last 4 or 3 digits of the 12NC catalogue number

Phycomp worldwide - Traditional type								
Low ohmic chip resistors								
Size: inch (mm)	**1210 (3225)**		**1218 (3248)**		**2010 (5025)**		**2512 (6432)**	
Power	1/2 W		1 W		3/4 W		1 W	
Tolerance	+5%	+1%	+5%	+1%	+5%	+1%	+5%	+1%
Resistance	E24	E24	E24	E24	E24	E24	E24	E24
Packing	paper tape		blister tape		blister tape		blister tape	
Quantity 4 000	---	---	2322 735 64...L	2322 735 7....L	2322 760 90..0L/60..7L	2322 761 90..0L/6...7L	2322 762 90..0L/60..7L	2322 763 90..0L/6...7L
5 000	2390 735 90..0L/60..7L	2390 735 3....L	---	---	---	---	---	---

For ordering rules: See page 14 for E24 / E96 values and the last 4 or 3 digits of the 12NC catalogue number

Phycomp CTC ordering code - Traditional type - North America
Regional code for ordering Phycomp branded products. Please see page 13 for details.

Thick film low ohmic, high power chip resistors, 0805 / 1206

Global part number - Preferred type

Ordering example: RL0805JR-7W0R01L

RL 0805 J R — 7W 0R01 L

Series name (code 1-2)
RL = Thick film low ohmic

Size code (code 3-6)
(inch / metric)
0805 = 2.0 x 1.25
1206 = 3.2 x 1.6

Tolerance (code 7)
F = ±1%
G = ±2%
J = ±5%

Packing style (code 8)
R = Paper tape reel

Default code (code 17)

Resistance (code 12-16)
0R01 = 0.01Ω
0R1 = 0.1Ω
0R2 = 0.2Ω

Taping reel (code 10-11)
7W = 7 inch Dia. reel and
2 x standard power type

T. C. R. (code 9)
"—" = Based on spec.
(— for thick film only)

Note: 1. All of our RSMD products are RoHS compliant. "LFP" of the internal 2D reel label mentions "Lead Free Process"
2. Letter L is system default code for ordering only

Phycomp worldwide - Traditional type

Low ohmic high power chip resistors				
Size: inch (mm)	**0805 (2012)**		**1206 (3216)**	
Power	1/4 W		1/2 W	
Tolerance	+5%	+1%	+5%	+1%
Resistance	E24	E24 / E96	E24	E24 / E96
Packing	paper tape		paper tape	
Quantity 5 000	2350 511 15…L	2350 511 17…L	2350 519 01…L	2350 519 1….L

For ordering rules: See page 14 for E24 / E96 values and the last 4 or 3 digits of the 12NC catalogue number

Phycomp CTC ordering code - Traditional type - North America

Regional code for ordering Phycomp branded products. Please see page 13 for details.

Thick film low ohmic low T. C. R. chip resistors, 0402 to 2512

Features

- Excellent T. C. R.
- Precision current sensing control
- Excellent performance for current sensing applications
- Low ohmic and high power

Derating curve

Maximum dissipation (P) in percentage of rated power as a function of the operating ambient temperature (T_{amb}).

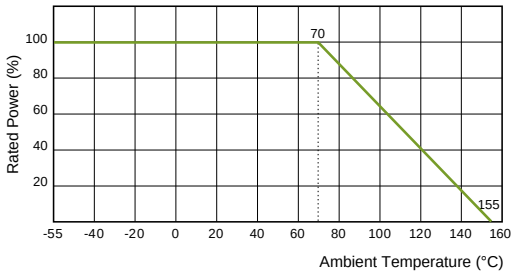

Construction

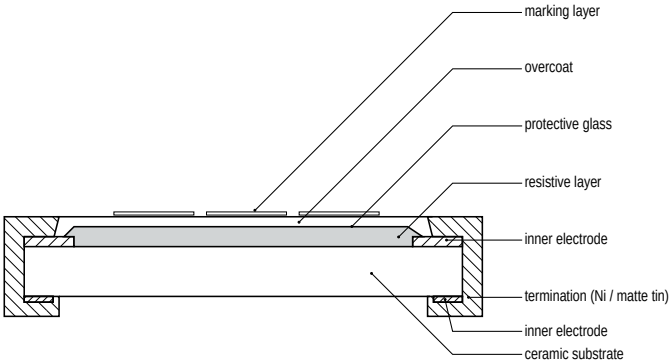

Dimensions

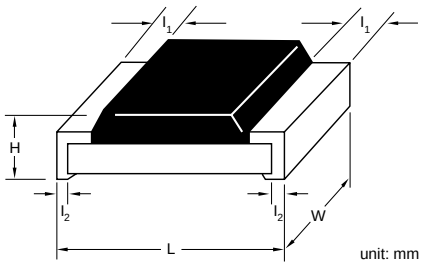

Type	L	W	H	l_1	l_2
PT0402	1.00 ±0.10	0.50 ±0.05	0.35 ±0.05	0.20 ±0.10	0.25 ±0.10
PT0603	1.60 ±0.10	0.80 ±0.10	0.45 ±0.10	0.25 ±0.15	0.25 ±0.15
PT0805	2.00 ±0.10	1.25 ±0.10	0.55 ±0.10	0.35 ±0.20	0.35 ±0.20
PT1206	3.10 ±0.10	1.60 ±0.10	0.55 ±0.10	0.45 ±0.20	0.45 ±0.20
PT2010	5.00 ±0.10	2.50 ±0.15	0.55 ±0.10	0.60 ±0.20	0.50 ±0.20
PT2512	6.35 ±0.10	3.20 ±0.15	0.55 ±0.10	0.60 ±0.20	0.50 ±0.20

Note: For relevant physical dimensions, please refer to above construction outlines
Please contact our sales offices, distributors and representatives in your region before ordering

Thick film low ohmic low T. C. R. chip resistors, 0402 to 2512

Electrical characteristics								
Type	Power P_{70}	Operating Temp. range	Max. working voltage	Tolerance	Resistance range & T. C. R.		Jumper criteria	
PT0402	1/16W	-55°C to +155°C	(PxR)^1/2	E24 ±2%, ±5% E24/E96 ±1%	50mΩ ≤ R < 68mΩ 68mΩ ≤ R < 100mΩ 100mΩ ≤ R < 1Ω	±600 ppm/°C ±300 ppm/°C ±200 ppm/°C	Max. resistance Rated current	--- ---
	1/8W							
	1/6W				68mΩ	±300 ppm/°C		
PT0603	1/10W				50mΩ 50mΩ < R < 68mΩ 68mΩ ≤ R < 100mΩ 100mΩ ≤ R < 1Ω	0/+400 ppm/°C 0/+350 ppm/°C 0/+300 ppm/°C ±200 ppm/°C	Max. resistance Rated current	8mΩ 5A
	1/5W				50mΩ 50mΩ < R < 68mΩ 68mΩ ≤ R < 100mΩ 100mΩ ≤ R < 1Ω	0/+350 ppm/°C 0/+300 ppm/°C 0/+250 ppm/°C ±100 ppm/°C		
	1/3W				50mΩ 50mΩ < R < 68mΩ 68mΩ	0/+400 ppm/°C 0/+350 ppm/°C 0/+300 ppm/°C		
PT0805	1/8W				100mΩ ≤ R < 1Ω	±100 ppm/°C	Max. resistance Rated current	--- ---
	1/4W							
PT1206	1/4W				100mΩ 100mΩ < R < 1Ω	±100 ppm/°C ±75 ppm/°C	Max. resistance Rated current	5mΩ 10A
	1/2W							
PT2010	3/4W						Max. resistance Rated current	--- ---
	1W							
PT2512	1W						Max. resistance Rated current	--- ---
	2W							

Environmental characteristics				
Performance test		Test method	Procedure	Requirements
Life		MIL-STD-202G-method 108A	1 000 hours at 70 ±5°C applied RCWV 1.5 hours on, 0.5 hours off, still air required	±(1% +0.0005Ω) < 20mΩ for jumper
High temperature exposure		MIL-STD-202G-method 108A	1 000 hours at maximum operating temperature depending on specification, unpowered	±(1% +0.0005Ω) < 20mΩ for jumper
Moisture resistance		MIL-STD-202G-method 106F	Each temperature / humidity cycle is defined as 8 hours (method 106F), 3 cycles / 24 hours for 10d with 25°C / 65°C 95% R.H	±(0.5% +0.0005Ω) < 20mΩ for jumper
Thermal shock		MIL-STD-202G-method 107G	LCT / UCT, number of cycles required is 300 Maximum transfer time is 20 seconds	±(1% +0.0005Ω) < 10mΩ for jumper
Solderability	Wetting	J-STD-002B testB	Electrical test not required. Magnification 50X Lead-free solder bath at 245 ±3°C Dipping time: 3 ±0.5 seconds	Well tinned (≥95% covered) No visible damage
	Resistance to soldering heat	MIL-STD-202G-method 210F	Lead-free solder, 260°C, 10 seconds immersion time	±(0.5% +0.0005Ω) No visible damage < 10mΩ for jumper
Short time overload		MIL-R-55342-D-para 4.7.5	PT standard power: 6.25 times of rated power for 5 seconds at room temperature PT high power: 5 times of rated power for 5 seconds at room temperature PT jumper: 2.5 times of rated current for 5 seconds at room temperature	±(1% +0.0005Ω) No visible damage < 10mΩ for jumper

Global part number - Preferred type

Ordering example: PT2512FK-070R01L

PT 2512 F K — 07 0R01 L

Series name (code 1-2)
PT = Thick film low ohmic low T. C. R.

Size code (code 3-6)
(inch / metric)
0402 = 1.0 x 0.5
0603 = 1.6 x 0.8
0805 = 2.0 x 1.25
1206 = 3.2 x 1.6
2010 = 5.0 x 2.5
2512 = 6.35 x 3.2

Tolerance (code 7)
F = ±1%
G = ±2%
J = ±5%
"—" for Jumper ordering

Packing style (code 8)
R = Paper tape reel
K = Embossed plastic tape reel

Default code(1/2) (code 17)

Resistance (code 12-16)
0R = Jumper
0R1 = 0.1Ω
0R2 = 0.2Ω

Taping reel (code 10-11)
07 = 7 inch Dia. reel
13 = 13 inch Dia. reel
7W = 7 inch Dia. reel and 2 x standard power type

T. C. R. (code 9)
"—" = Based on spec.

Note: 1. All of our RSMD products are RoHS compliant. "LFP" of the internal 2D reel label mentions "Lead Free Process"
2. Letter L is system default code for ordering only
3. PT series products are available by "Global part number" only

Phycomp CTC ordering code - Traditional type - North America

Regional code for ordering Phycomp branded products. Please see page 13 for details.

Thick film low ohmic low T. C. R. chip resistors, wide termination, 0815

Features

- Excellent T. C. R.
- Precision current sensing control
- Excellent performance for current sensing applications
- Low ohmic and high power

Derating curve

Maximum dissipation (P) in percentage of rated power as a function of the operating ambient temperature (T_{amb}).

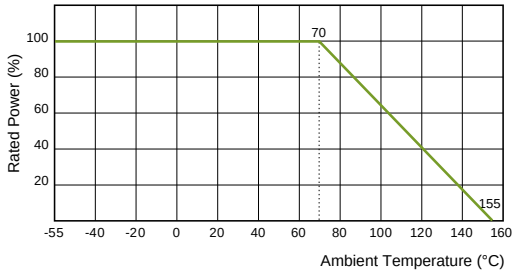

Construction

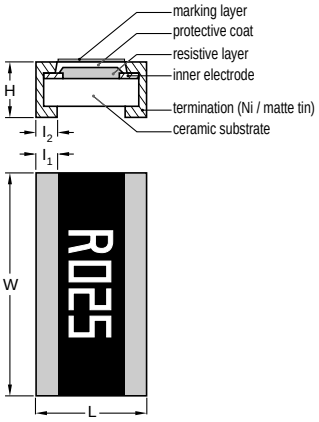

Dimensions

Type	L	W	H	l_1	l_2
PT0815	2.00 ±0.10	3.70 ±0.10	0.50 ±0.10	0.35 ±0.20	0.40 ±0.20

Thick film low ohmic low T. C. R. chip resistors, wide termination, 0815

Electrical characteristics						
Type	Power P_{70}	Operating Temp. range	Max. working voltage	Tolerance	Resistance range & T. C. R.	
PT0815	1/2W	-55°C to +155°C	(PxR)^1/2	E24 ±2%, ±5% E24/E96 ±1%	25mΩ ≤ R ≤ 50mΩ	±100 ppm/°C
	1W					

Environmental characteristics				
Performance test		Test method	Procedure	Requirements
Life		MIL-STD-202G-method 108A	1 000 hours at 70 ±5°C applied RCWV 1.5 hours on, 0.5 hours off, still air required	±(1% +0.0005Ω)
High temperature exposure		MIL-STD-202G-method 108A	1 000 hours at maximum operating temperature depending on specification, unpowered	±(1% +0.0005Ω)
Moisture resistance		MIL-STD-202G-method 106F	Each temperature / humidity cycle is defined as 8 hours (method 106F), 3 cycles / 24 hours for 10d with 25°C / 65°C 95% R.H	±(0.5% +0.0005Ω)
Solderability	Wetting	J-STD-002B testB	Electrical test not required. Magnification 50X Lead-free solder bath at 245 ±3°C Dipping time: 3 ±0.5 seconds	Well tinned (≥95% covered) No visible damage
	Resistance to soldering heat	MIL-STD-202G-method 210F	Lead-free solder, 260°C, 10 seconds immersion time	±(0.5% +0.0005Ω) No visible damage
Short time overload		MIL-R-55342D-para 4.7.5	PT standard power: 6.25 times of rated power for 5 seconds at room temperature PT high power: 5 times of rated power for 5 seconds at room temperature	±(1% +0.0005Ω) No visible damage

Thick film low ohmic low T. C. R. chip resistors, wide termination, 0815

Global part number - Preferred type

Ordering example: PT0815FK-070R01L

PT 0815 F K — 07 0R01 L

Series name (code 1-2)
PT = Thick film low ohmic low T. C. R.

Size code (code 3-6)
(inch / metric)
0815 = 2.00 x 3.70

Tolerance (code 7)
F = ±1%
G = ±2%
J = ±5%

Packing style (code 8)
K = Embossed plastic tape reel

Default code(1/2) (code 17)

Resistance (code 12-16)
0R025 = 0.025Ω
0R05 = 0.05Ω

Taping reel (code 10-11)
07 = 7 inch Dia. reel
7W = 7 inch Dia. reel and
2 x standard power type

T. C. R. (code 9)
"—" = base on spec

Note: 1. All of our RSMD products are RoHS compliant. "LFP" of the internal 2D reel label mentions "Lead Free Process"
2. Letter L is system default code for ordering only
3. PT series products are available by "Global part number" only

Features

- Excellent T. C. R. compared to thick film low ohmic
- Precision current sensing control
- Excellent performance for current sensing applications
- Ultra low ohmic down to 0.0005Ω

Derating curve

Maximum dissipation (P) in percentage of rated power as a function of the operating ambient temperature (T_{amb}).

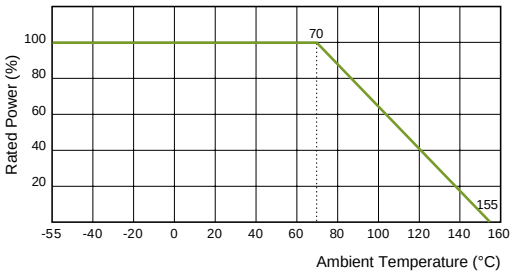

Construction

PR/PA series

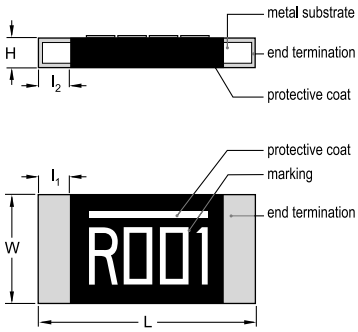

PF / PH / PE series

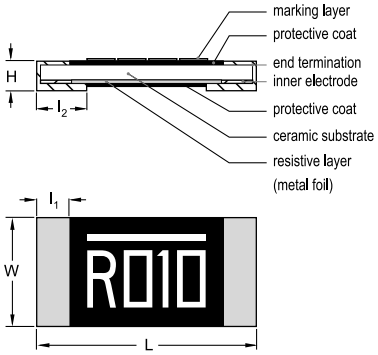

Note: construction will be adjusted to resistance value (only for PF series).

Dimensions

PR series unit: mm

Type	Resistance range	L	W	H	l_1	l_2
PR1206	1mΩ ≤ R ≤ 6mΩ	3.20 ±0.25	1.60 ±0.25	0.64 ±0.25	0.50 ±0.25	0.50 ±0.25
PR2010	1mΩ ≤ R ≤ 3mΩ	5.10 ±0.25	2.54 ±0.25	0.80 ±0.25	1.30 ±0.25	1.30 ±0.25
	4mΩ ≤ R ≤ 100mΩ	5.10 ±0.25	2.54 ±0.25	0.64 ±0.25	0.80 ±0.25	0.80 ±0.25
PR2512 (1)	1mΩ ≤ R ≤ 2mΩ	6.40 ±0.20	3.20 ±0.20	0.75 ±0.15	1.20 ±0.20	1.20 ±0.20
	3mΩ ≤ R ≤ 5mΩ			0.55 ±0.10	0.60 ±0.20	0.60 ±0.20
PR2512 (2)	0.5mΩ ≤ R ≤ 4mΩ	6.25 ±0.25	3.30 ±0.25	0.78 ±0.25	1.88 ±0.25	1.88 ±0.25
	5mΩ ≤ R ≤ 75mΩ			0.64 ±0.25	1.11 ±0.25	1.11 ±0.25

PA series unit: mm

Type	Resistance range	L	W	H	l_1	l_2
PA2512	1mΩ ≤ R ≤ 10mΩ	6.50 ±0.20	3.20 ±0.20	0.65 ±0.15	0.90 ±0.20	0.90 ±0.20

Note: 1. Apply to ordering codes ending in "L"
2. Apply to ordering codes ending in "Z"
Please contact sales offices, distributors and representatives in your region before ordering

Dimensions

PF / PH / PE series unit: mm

Type	Resistance range	L	W	H	l_1	l_2
PF / PE0603 (2)	5mΩ ≤ R < 100mΩ	1.60 ±0.20	0.80 ±0.20	0.60 ±0.15	---	0.30 ±0.15
PF / PH0805 (1)	10mΩ < R ≤ 50mΩ	2.03 ±0.25	1.27 ±0.25	0.33 ±0.12	0.38 ±0.25	0.38 ±0.25
PF / PH / PE0805 (2)	4mΩ	2.00 ±0.20	1.25 ±0.20	0.60 ±0.15	---	0.70 ±0.15
	5mΩ					0.63 ±0.15
	6mΩ ≤ R ≤ 7mΩ					0.55 ±0.15
	8mΩ ≤ R < 100mΩ					0.40 ±0.15
PF / PH1206 (1)	10mΩ < R ≤ 50mΩ	3.20 ±0.25	1.60 ±0.25	0.60 ±0.25	0.50 ±0.25	0.65 ±0.25
PF / PH / PE1206 (2)	3mΩ	3.20 ±0.20	1.60 ±0.20	0.60 ±0.15	---	1.30 ±0.20
	4mΩ					1.20 ±0.20
	5mΩ ≤ R ≤ 8mΩ					1.15 ±0.20
	9mΩ ≤ R < 100mΩ					0.58 ±0.20
PF2010 (2)	5mΩ ≤ R ≤ 9mΩ	5.00 ±0.20	2.50 ±0.20	0.60 ±0.15	---	1.50 ±0.20
	10mΩ ≤ R < 100mΩ					0.60 ±0.20
PF2512 (1)	6mΩ	6.45 ±0.25	3.25 ±0.25	0.70 ±0.25	0.75 ±0.25	1.85 ±0.25
	7mΩ ≤ R ≤ 15mΩ					1.55 ±0.25
	20mΩ ≤ R ≤ 50mΩ (1W)				1.30 ±0.25	0.75 ±0.25
	20mΩ ≤ R ≤ 50mΩ (2W)				0.75 ±0.25	1.30 ±0.25
PF / PE2512 (2)	1mΩ	6.30 ±0.20	3.10 ±0.20	0.60 ±0.15	---	2.93 ±0.20
	2mΩ					2.70 ±0.20
	3mΩ					2.50 ±0.20
	4mΩ					2.15 ±0.20
	5mΩ					1.95 ±0.20
	6mΩ ≤ R ≤ 8mΩ					1.90 ±0.20
	9mΩ ≤ R < 100mΩ					0.95 ±0.20
PF4527 (2)	6mΩ ≤ R <1Ω	11.50 ±0.20	7.00 ±0.20	0.60 ±0.15	---	2.60 ±0.20

Note: 1. Apply to ordering codes ending in “L”
2. Apply to ordering codes ending in “Z”
3. For relevant physical dimensions, please refer to above construction outlines
Please contact with sales offices, distributors and representatives in your region before ordering

Current sensors - low T. C. R. chip resistors, 0603 to 2512

Electrical characteristics								
Type	Technology	Size	Power P70	Operating Temp. range	Max. working voltage	Tolerance	Resistance range	Min. T. C. R.
PE	Metal Foil	0603	1/2W	-55°C to 155°C	(PxR)^1/2	±1%, ±2%, ±5%	5mΩ ≤ R < 100mΩ	±75 ppm/°C
		0805	1/2W				4mΩ ≤ R < 100mΩ	
		1206	1W				3mΩ ≤ R < 100mΩ	
		2512	2W				1mΩ ≤ R < 100mΩ	
PF	Metal Foil	0603	1/2W	-55°C to 155°C	(PxR)^1/2	±1%, ±2%, ±5%	5mΩ≤ R < 100mΩ	±75 ppm/°C
		0805	1/8W				4mΩ ≤ R < 100mΩ	
			1/4W					
			1/3W					
			1/2W					
		1206	1/4W				3mΩ ≤ R < 100mΩ	
			1/2W					
		2010	1W				5mΩ ≤ R < 100mΩ	
		2512	1W				1mΩ ≤ R < 100mΩ	
			2W					
			3W				1mΩ ≤ R ≤ 50mΩ	
		4527	3W				6mΩ ≤ R < 1Ω	
PH	Metal Foil	0805	4/5W	-55°C to 155°C	(PxR)^1/2	±1%, ±2%, ±5%	4mΩ ≤ R ≤ 50mΩ	±75 ppm/°C
		1206	1W					
PR	Metal Plate	1206	1/4W	-55°C to 155°C	(PxR)^1/2	±1%, ±2%, ±5%	1mΩ ≤ R ≤ 6mΩ	±50 ppm/°C
			1/2W					
			1W					
		2010	1/2W			±1%, ±2%, ±5%	1mΩ ≤ R < 100mΩ	
			1W					
		2512	1W			±0.5%	7mΩ ≤ R ≤ 75mΩ	
						±1%, ±2%, ±5%	0.5mΩ ≤ R ≤ 5mΩ	0.5mΩ ≤ R ≤ 2mΩ ±200 ppm/°C 3mΩ ≤ R ≤ 5mΩ ±100 ppm/°C
			2W			±0.5%	7mΩ ≤ R ≤ 75mΩ	±50 ppm/°C
						±1%, ±2%, ±5%	0.5mΩ ≤ R ≤ 5mΩ	0.5mΩ ≤ R ≤ 2mΩ ±200 ppm/°C 3mΩ ≤ R ≤ 5mΩ ±100 ppm/°C
			3W			±1%, ±2%, ±5%	0.5mΩ ≤ R ≤ 10mΩ	±50 ppm/°C
PA	Metal Plate	2512	1W	-55°C to 155°C	(PxR)^1/2	±1%, ±5%	1mΩ ≤ R ≤ 10mΩ	±100 ppm/°C
			2W					
			3W					

Note: Please contact with sales offices, distributors and representatives in your region before ordering

Environmental characteristics				
Performance test		Test method	Procedure	Requirements
Life		MIL-STD-202G-method 108A	1 000 hours at 70 ±5°C applied RCWV 1.5 hours on, 0.5 hours off, still air required	±(1% +0.0005Ω)
High temperature exposure		MIL-STD-202G-method 108A	1 000 hours at maximum operating temperature depending on specification, unpowered	±(1% +0.0005Ω)
Moisture resistance		MIL-STD-202G-method 106F	Each temperature / humidity cycle is defined as 8 hours (method 106F), 3 cycles / 24 hours for 10d with 25°C / 65°C 95% R.H	±(0.5% +0.0005Ω)
Thermal shock		MIL-STD-202G-method 107G	LCT / UCT, number of cycles required is 300 Maximum transfer time is 20 seconds	±(0.5% +0.0005Ω)
Solderability	Wetting	J-STD-002B testB	Electrical test not required. Magnification 50X Lead-free solder bath at 245 ±3°C Dipping time: 3 ±0.5 seconds	Well tinned (≥95% covered)
	Resistance to soldering heat	MIL-STD-202G-method 210F	Lead-free solder, 260°C, 10 seconds immersion time	±(0.5% +0.0005Ω) No visible damage
Short time overload		MIL-R-55342-D-para 4.7.5	5 times of rated power for 5 seconds at room temperature	±(0.5% +0.0005Ω) No visible damage

Current sensors - low T. C. R. chip resistors, 0603 to 2512

Global part number - Preferred type

Ordering example: PF2512FKF070R01L

PF 2512 F K F 07 0R01 L

Series name (code 1-2)
PR/PA/PF/PH/PE = Current sensors - low T. C. R.

Size code (code 3-6)
(inch / metric)
0603 = 1.6 x 0.8
0805 = 2.0 x 1.25
1206 = 3.2 x 1.6
2010 = 5.0 x 2.5
2512 = 6.35 x 3.2
4527 = 11.0 x 7.0

Tolerance (code 7)
F = ±1%
G = ±2%
J = ±5%

Packing style (code 8)
R = Paper tape reel
K = Embossed plastic tape reel

Default code(1/2) (code 17)
L / Z = Default code

Resistance (code 12-16)
0R01 = 0.01Ω
0R1 = 0.1Ω
0R2 = 0.2Ω

Taping reel (code 10-11)
07 = 7 inch Dia. reel
7W = 7 inch Dia. reel
2 x standard power type
7T = 7 inch Dia. reel
3 x standard power type
47 = 7 inch Dia. reel
4 x standard power type
57 = 7 inch Dia. reel
5 x standard power type

T. C. R. (code 9)
E = ±50 ppm/°C
M = ±75 ppm/°C
F = ±100 ppm/°C
G = ±200 ppm/°C

Note: 1. All of our RSMD products are RoHS compliant. "LFP" of the internal 2D reel label mentions "Lead Free Process"
2. PH series products are available by "Global part number" only

Phycomp worldwide - Traditional type

Current Sensor - Low T. C. R. / PR series								
Size: inch (mm)	2010 (5025)				2512 (6432)			
Power	1/2 W		1 W		1 W		2 W	
Tolerance	+5%	+1%	+5%	+1%	+5%	+1%	+5%	+1%
Packing	blister tape				blister tape			
Quantity 4 000	2322 760 63..0L	2322 761 11.. 0L	2322 760 65.. 0L	2322 761 13.. 0L	2322 762 94..0L	2322 763 95..0L	2322 762 10..0L	2322 763 10..0L

For ordering rules: See page 14 for E24 / E96 values and the last 4 or 3 digits of the 12NC catalogue number

Phycomp worldwide - Traditional type

Current Sensor - Low T. C. R. / PF series				
Size: inch (mm)	2512 (6432)			
Power	1 W		2 W	
Tolerance	+5%	+1%	+5%	+1%
Packing	blister tape			
Quantity 4 000	2322 764 96..L	2322 764 97..L	2322 764 10..L	2322 764 30..L

For ordering rules: See page 14 for E24 / E96 values and the last 4 or 3 digits of the 12NC catalogue number

Phycomp CTC ordering code - Traditional type - North America

Regional code for ordering Phycomp branded products. Please see page 13 for details.

Current sensors - low T. C. R. chip resistors, wide termination, 0612 to 0830

Features

- Excellent T. C. R. compared to thick film low ohmic
- Precision current sensing control
- Excellent performance for current sensing applications
- Low ohmic and high power

Derating curve

Maximum dissipation (P) in percentage of rated power as a function of the operating ambient temperature (T_{amb}).

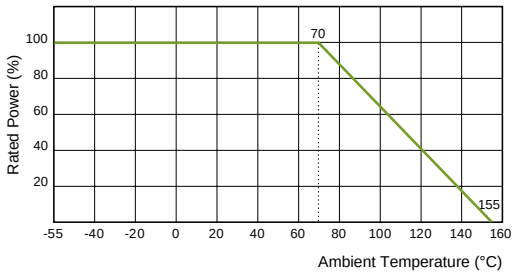

Construction

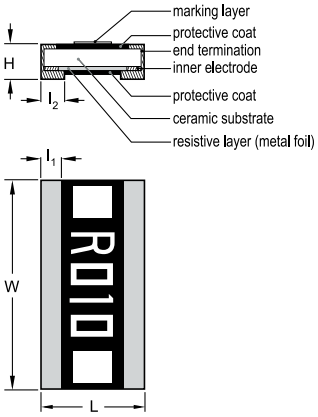

Dimensions

Type	Resistance range	L	W	H	l_1	l_2
PF0612 (2)	1mΩ ≤ R ≤ 50mΩ	1.60 ±0.20	3.20 ±0.20	0.60 ±0.15	---	0.60 ±0.20
PF0815 (2)	1mΩ ≤ R ≤ 20mΩ	2.15 ±0.20	3.75 ±0.20	0.60 ±0.125	---	0.60 ±0.20
PF0815 (1)	10 / 15 / 20mΩ	2.15 ±0.20	3.75 ±0.25	0.65 ±0.25	0.65 ±0.25	0.70 ±0.25
PF0830 (2)	1mΩ ≤ R ≤ 9mΩ	2.5 ±0.20	7.50 ±0.30	0.60 ±0.15	---	0.60 ±0.15
	10mΩ ≤ R ≤ 100mΩ	2.5 ±0.20	7.50 ±0.30	0.60 ±0.15	---	0.58 ±0.15

Note: 1. Apply to ordering codes ending in "L"
2. Apply to ordering codes ending in "Z"
Please contact sales offices, distributors and representatives in your region before ordering

Current sensors - low T. C. R. chip resistors, wide termination, 0612 to 0830

Electrical characteristics								
Type	Technology	Size	Power P_{70}	Operating Temp. range	Max. working voltage	Tolerance	Resistance range & T. C. R.	
PF	Metal Foil wide termination	0612	1W	-55°C to 155°C	(PxR)^1/2	±1%, ±2%, ±5%	1mΩ ≤ R ≤ 50mΩ	±75 ppm/°C
		0815	1W				1mΩ ≤ R ≤ 20mΩ	
		0830	2W				1mΩ ≤ R ≤ 100mΩ	

Note: Please contact with sales offices, distributors and representatives in your region before ordering

Environmental characteristics				
Performance test		Test method	Procedure	Requirements
Life		MIL-STD-202G-method 108A	1 000 hours at 70 ±5°C applied RCWV 1.5 hours on, 0.5 hours off, still air required	±(1% +0.0005Ω)
High temperature exposure		MIL-STD-202G-method 108A	1 000 hours at maximum operating temperature depending on specification, unpowered	±(1% +0.0005Ω)
Moisture resistance		MIL-STD-202G-method 106F	Each temperature / humidity cycle is defined as 8 hours (method 106F), 3 cycles / 24 hours for 10d with 25°C / 65°C 95% R.H	±(0.5% +0.0005Ω)
Solderability	Wetting	J-STD-002B testB	Electrical test not required. Magnification 50X Lead-free solder bath at 245 ±3°C Dipping time: 3 ±0.5 seconds	Well tinned (≥95% covered)
	Resistance to soldering heat	MIL-STD-202G-method 210F	Lead-free solder, 260°C, 10 seconds immersion time	±(0.5% +0.0005Ω) No visible damage
Short time overload		MIL-R-55342D-para 4.7.5	5 times of rated power for 5 seconds at room temperature	±(0.5% +0.0005Ω) No visible damage

Current sensors - low T. C. R. chip resistors, wide termination, 0612 to 0830

Global part number - Preferred type

Ordering example: PF0815FKF070R02L

PF 0815 F K F 07 0R01 L

Series name (code 1-2)
PF = current sensors - low T. C. R., wide termination

Size code (code 3-6)
(inch / metric)
0612 = 1.6 x 3.2
0815 = 2.15 x 3.75
0830 = 2.0 x 7.5

Tolerance (code 7)
F = ±1%
G = ±2%
J = ±5%

Packing style (code 8)
K = Embossed plastic tape reel

Default code(1/2) (code 17)
L / Z = Default code

Resistance (code 12-16)
0R01 = 0.01Ω
0R02 = 0.02Ω

Taping reel (code 10-11)
07 = 7 inch Dia. reel
7W = 7 inch Dia. reel
2 x standard power type

T. C. R. (code 9)
F = ±100 ppm/°C

Note: 1. All of our RSMD products are RoHS compliant. "LFP" of the internal 2D reel label mentions "Lead Free Process"
2. PF series wide termination type products are available by "Global part number" only

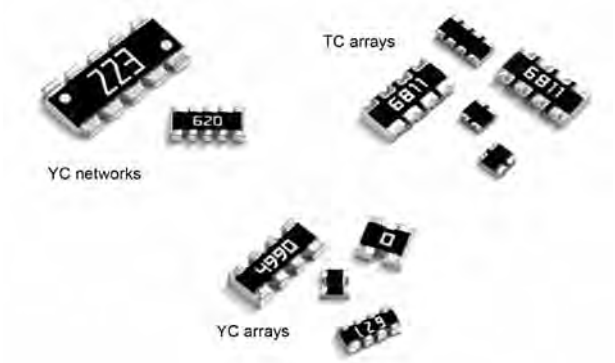

Features

- Integrated discrete chip resistors from 2 to 8 pcs
- More efficient in pick & place application
- Low assembly costs
- Reduced size of final equipment
- Higher component and equipment reliability

Schematics

YC102/122/162

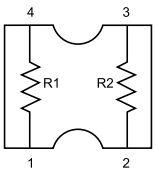

R1 = R2

YC104/124/164/324

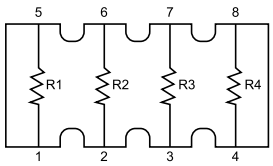

R1 = R2 = R3 = R4

YC248

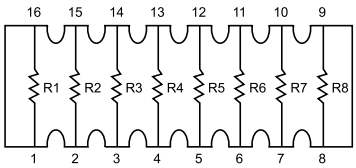

R1 = R2 = R3 = R4 = R5 = R6 = R7 = R8

YC358 (L-Type)

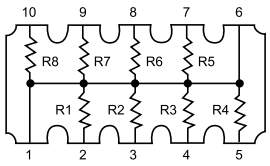

R1 = R2 = R3 = R4 = R5 = R6 = R7 = R8

TC122

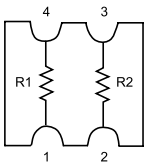

R1 = R2

TC124/164

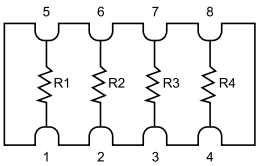

R1 = R2 = R3 = R4

YC158

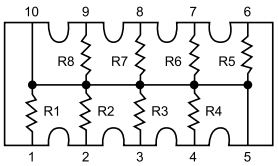

R1 = R2 = R3 = R4 = R5 = R6 = R7 = R8

YC358 (T-Type)

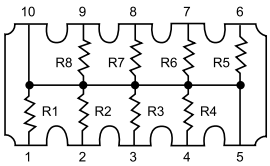

R1 = R2 = R3 = R4 = R5 = R6 = R7 = R8

Dimensions

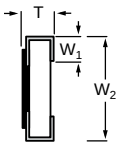

Side view for all types

YC 102/122/162

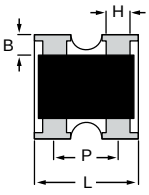

YC 104/124/164/324 158/358/248

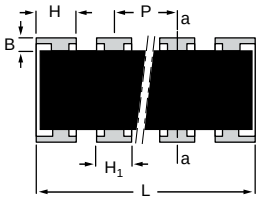

TC 122

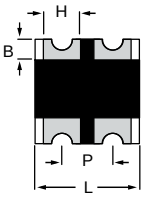

TC 124/164

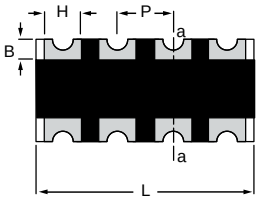

unit: mm

Type	H / H_1	B	P	L	T	W_1	W_2
YC102	H: 0.35 ±0.10	0.20 ±0.10	0.50 ±0.05	0.80 ±0.10	0.35 ±0.10	0.15 ±0.10	0.60 ±0.10
YC104	H: 0.20 ±0.10	0.15 ±0.05	0.40 (Typical)	1.40 ±0.10	0.35 ±0.10	0.15 ±0.10	0.60 ±0.10
YC122	H: 0.21 +0.10/-0.05	0.20 ±0.10	0.67 ±0.05	1.00 ±0.10	0.30 ±0.10	0.25 ±0.10	1.00 ±0.10
YC162	H: 0.30 ±0.10	0.30 ±0.10	0.80 ±0.05	1.60 ±0.10	0.40 ±0.10	0.30 ±0.10	1.60 ±0.10
YC124	H: 0.45 ±0.05 H_1: 0.30 ±0.05	0.20 ±0.15	0.50 ±0.05	2.00 ±0.10	0.45 ±0.10	0.30 ±0.15	1.00 ±0.10
YC164	H: 0.65 ±0.05 H_1: 0.50 ±0.15	0.30 ±0.15	0.80 ±0.05	3.20 ±0.15	0.60 ±0.10	0.30 ±0.15	1.60 ±0.15
YC324	H: 1.10 ±0.15 H_1: 0.90 ±0.15	0.50 ±0.20	1.27 ±0.05	5.08 ±0.20	0.60 ±0.10	0.50 ±0.15	3.20 ±0.20
YC248	H: 0.45 ±0.05 H_1: 0.30 ±0.05	0.30 ±0.15	0.50 ±0.05	4.00 ±0.20	0.45 ±0.10	0.40 ±0.15	1.60 ±0.15
TC122	H: 0.30 ±0.05	0.25 ±0.15	0.50 ±0.05	1.00 ±0.10	0.30 ±0.10	0.25 ±0.15	1.00 ±0.10
TC124	H: 0.30 ±0.10	0.20 ±0.10	0.50 ±0.05	2.00 ±0.10	0.40 ±0.10	0.25 ±0.10	1.00 ±0.10
TC164	H: 0.60 ±0.15	0.30 ±0.15	0.80 ±0.05	3.20 ±0.15	0.60 ±0.10	0.30 ±0.15	1.60 ±0.15
YC158	H: 0.45 ±0.05	0.30 ±0.15	0.64 ±0.05	3.20 ±0.20	0.60 ±0.10	0.35 ±0.15	1.60 ±0.15
YC358	H: 1.10 ±0.15 H_1: 0.90 ±0.15	0.50 ±0.15	1.27 ±0.05	6.40 ±0.20	0.60 ±0.10	0.50 ±0.15	3.20 ±0.20

Electrical characteristics											
Type	Power P_{70}	Operating Temp. range	MWV	RCOV	DWV	Resistance range & tolerance		T. C. R.		Jumper criteria (unit: A)	
YC102	1/32W	-55°C to +125°C	15V	30V	30V	E24 ±5% E24/E96 ±1% Jumper	10Ω ≤ R ≤ 1MΩ 10Ω ≤ R ≤ 1MΩ < 0.05Ω	±200 ppm/°C		Rated current Max. current	0.5 1.0
YC104	1/32W	-55°C to +125°C	12.5V	25V	25V	E24 ±5% E24/E96 ±1% Jumper	10Ω ≤ R ≤ 1MΩ 10Ω ≤ R ≤ 1MΩ < 0.05Ω			Rated current Max. current	0.5 1.0
YC122	1/16W	-55°C to +125°C	50V	100V	100V	E24 ±5% E24/E96 ±1% Jumper	1Ω ≤ R ≤ 1MΩ 10Ω ≤ R ≤ 1MΩ < 0.05Ω			Rated current Max. current	0.5 1.0
YC162	1/16W	-55°C to +125°C	50V	100V	100V	E24 ±5% Jumper	10Ω ≤ R ≤ 1MΩ < 0.05Ω			Rated current Max. current	1.0 2.0
YC124	1/16W	-55°C to +155°C	25V	50V	100V	E24 ±5% E24/E96 ±1% Jumper	1Ω ≤ R ≤ 1MΩ 1Ω ≤ R ≤ 1MΩ < 0.05Ω	1Ω ≤ R ≤ 10MΩ 10Ω ≤ R ≤ 1MΩ	±250 ppm/°C ±200 ppm/°C	Rated current Max. current	1.0 2.0
YC164	1/16W	-55°C to +155°C	50V	100V	100V	E24 ±5% E24/E96 ±1% Jumper	1Ω ≤ R ≤ 1MΩ 1Ω ≤ R ≤ 1MΩ < 0.05Ω	±200 ppm/°C		Rated current Max. current	1.0 2.0
YC324	1/8W	-55°C to +155°C	200V	500V	500V	E24 ±5% E24/E96 ±1%	10Ω ≤ R ≤ 1MΩ 10Ω ≤ R ≤ 1MΩ			--	--
YC248	1/16W	-55°C to +155°C	50V	100V	100V	E24 ±5% E24/E96 ±1% Jumper	10Ω ≤ R ≤ 1MΩ 10Ω ≤ R ≤ 1MΩ < 0.05Ω			Rated current Max. current	2.0 10.0
TC122	1/16W	-55°C to +125°C	50V	100V	100V	E24 ±5% E24/E96 ±1% Jumper	10Ω ≤ R ≤ 1MΩ 10Ω ≤ R ≤ 1MΩ < 0.05Ω			Rated current Max. current	1.0 1.5
TC124	1/16W	-55°C to +125°C	50V	100V	100V	E24 ±5% E24/E96 ±1% Jumper	10Ω ≤ R ≤ 1MΩ 10Ω ≤ R ≤ 1MΩ < 0.05Ω			Rated current Max. current	1.0 1.5
TC164	1/16W	-55°C to +155°C	50V	100V	100V	E24 ±5% E24/E96 ±1% Jumper	10Ω ≤ R ≤ 1MΩ 10Ω ≤ R ≤ 1MΩ < 0.05Ω			Rated current Max. current	1.0 2.0
YC158	1/16W	-55°C to +155°C	25V	50V	50V	E24 ±5%	10Ω ≤ R ≤ 100KΩ			--	--
YC358	1/16W	-55°C to +155°C	50V	100V	100V	E24 ±5%	10Ω ≤ R ≤ 330KΩ			--	--

Environmental characteristics				
Performance test		Test method	Procedure	Requirements
Life		MIL-STD-202G-method 108A	1 000 hours at 70 ±5°C applied RCWV 1.5 hours on, 0.5 hours off, still air required	±(2% +0.05Ω) < 100mΩ for jumper
High temperature exposure		MIL-STD-202G-method 108A	1 000 hours at maximum operating temperature depending on specification, unpowered	±(1% +0.05Ω) < 50mΩ for jumper
Moisture resistance		MIL-STD-202G-method 106F	Each temperature / humidity cycle is defined as 8 hours (method 106F), 3 cycles / 24 hours for 10d with 25°C / 65°C 95% R.H	±(2% +0.05Ω) < 100mΩ for jumper
Thermal shock		MIL-STD-202G-method 107G	LCT / UCT, number of cycles required is 300 Maximum transfer time is 20 seconds	±(0.5% +0.05Ω) for 10K to 10M ±(1% +0.05Ω) for others < 50mΩ for jumper
Solderability	Wetting	J-STD-002B testB	Electrical test not required. Magnification 50X Lead-free solder bath at 245 ±3°C Dipping time: 3 ±0.5 seconds	Well tinned (≥95% covered)
	Resistance to soldering heat	MIL-STD-202G-method 210F	Lead-free solder, 260°C, 10 seconds immersion time	±(1% +0.05Ω) < 50mΩ for jumper No visible damage
Short time overload		MIL-R-55342D-para 4.7.5	2.5 times RCWV or maximum overload voltage whichever is less for 5 seconds at room temperature	±(2% +0.05Ω) < 50mΩ for jumper No visible damage

Global part number - Arrays

Ordering example: YC122-JR-07100KL

YC 12 2 — J R — 07 100K L

Series name (code 1-2)
- YC = Array & Network (convex) thick film
- TC = Array (concave) thick film

Size code (inch) (code 3-4)
- 10 = 0201 x 2 (0202)
- 0201 x 4 (0204)
- 12 = 0402 x 2 (0404)
- 0402 x 4 (0408)
- 16 = 0603 x 2 (0606)
- 0603 x 4 (0612)
- 24 = 0602 x 8 (0616)
- 32 = 1206 x 4 (1224)

Number of resistors (code 5)
- 2 = 2 resistors
- 4 = 4 resistors
- 8 = 8 resistors

Schematic (code 6)
- "—" = Based on spec.

Default code (code 17)

Resistance (code 12-16)
- 0R = Jumper
- 10R = 10Ω
- 100R = 100Ω
- 100K = 100KΩ

Taping reel (code 10-11)
- 07 = 7 inch Dia. reel
- 10 = 10 inch Dia. reel
- 13 = 13 inch Dia. reel

T. C. R. (code 9)
- "—" = Based on spec.

Packing style (code 8)
- R = Paper tape reel
- K = Embossed plastic tape reel

Tolerance (code 7)
- F = ±1%
- J = ±5% (for Jumper ordering)

Note: 1. All of our RSMD products are RoHS compliant. "LFP" of the internal 2D reel label mentions "Lead Free Process"
2. Letter L is system default code for ordering only

Phycomp worldwide - Traditional type

Array thick film chip resistors

Size: inch / mm	2 X 0402 / 1 X 1		4 X 0402 / 2 X 1		8 X 0602 / 4.0 X 1.6		4 X 0603 / 3.2 X 1.3				4 X1206 / 5.2 X 3.1
Power	1/16 W		1/16 W		1/16 W		1/16 W				1/8 W
Tolerance	+5%	+1%	+5%	+1%	+5%	+1%	+5%	+1%	+5%	+1%	+5%
Type	R-array / R-network (convex)	R-array / R-network (convex)	R-array / R-network (convex)	R-array / R-network (convex)	R-array / R-network (convex)	R-array / R-network (convex)	R-array / R-network (convex)	R-array / R-network (convex)	R-array / R-network R-network (concave)	R-array / R-network (concave)	R-array / R-network (convex)
Resistance	E24	E24 / E96	E24	E24 / E96	E24	E24 / E96	E24	E24 / E96	E24	E24/E96	E24
Packing	paper tape		paper tape		paper tape		paper tape				blister tape
Quantity 4 000	---	---	---	---	---	---	---	---	---	---	2350 039 10...L
5 000	---	---	---	---	2350 053 10...L	2350 043 1....L	2350 035 10...L	2350 025 1....L	2350 034 10...L	2350 024 1...L	---
10 000	2350 013 11...L	2350 013 2....L	2350 033 11...L	2350 023 2....L	---	---	---	---	---	---	---
Jumper 5 000	---	---	---	---	2350 053 91001L	---	2350 035 91001L	---	2350 034 91001L	---	---
10 000	2350 013 91001L	---	2350 033 91001L	---	---	---	---	---	---	---	---

For ordering rules: See page 14 for E24 / E96 values and the last 4 or 3 digits of the 12NC catalogue number

Phycomp CTC ordering code - Traditional type - North America

Regional code for ordering Phycomp branded products. Please see page 13 for details.

Global part number - Networks

Ordering example: YC158TJR-07100KL

YC 15 8 T J R — 07 100K L

Series name (code 1-2)
YC = Array & Network (convex) thick film

Size code (inch) (code 3-4)
15 = 10Pin/8R (0612)
35 = 10Pin/8R (1225)

Number of resistors (code 5)
8 = 8 resistors

Schematic (code 6)
L = L-type (for YC358)
T = T-type (for YC158/358)

Default code (code 17)

Resistance (code 12-16)
0R = Jumper
10R = 10Ω
100R = 100Ω
100K = 100KΩ

Taping reel (code 10-11)
07 = 7 inch Dia. reel
13 = 13 inch Dia. reel

T. C. R. (code 9)
"—" = Based on spec.

Packing style (code 8)
R = Paper tape reel
K = Embossed plastic tape reel

Tolerance (code 7)
F = ±1%
J = ±5%

Note: 1. All of our RSMD products are RoHS compliant. "LFP" of the internal 2D reel label mentions "Lead Free Process"
2. Letter L is system default code for ordering only

Phycomp worldwide - Traditional type

Network thick film chip resistors			
Size: inch (mm)	**0612 (1632)**	**1225 (3264)**	
Power	1/16 W	1/16 W	
Tolerance	+5%	+5%	
Type	T-type 10 Pin / 8R PIN 5 and PIN 10 no resistance	T-type 10 Pin / 8R PIN 5 and PIN 10 no resistance	L-type 10 Pin / 8R PIN 1 and PIN 6 no resistance
Resistance	E24	E24	E24
Packing	paper tape	blister tape	
Quantity 4 000	---	2350 201 10...L	2350 200 10...L
Quantity 5 000	2350 230 10...L	---	---

For ordering rules: See page 14 for E24 / E96 values and the last 4 or 3 digits of the 12NC catalogue number

Phycomp CTC ordering code - Traditional type - North America

Regional code for ordering Phycomp branded products. Please see page 13 for details.

NiAu termination chip resistors, 0402 to 1206

Features

- New NiAu terminations provide special application for hybrid board gluing
- Competitive with AgPd terminations
- Special use in high temperature environment
- Higher component and equipment reliability

Derating curve

Maximum dissipation (P) in percentage of rated power as a function of the operating ambient temperature (T_{amb}).

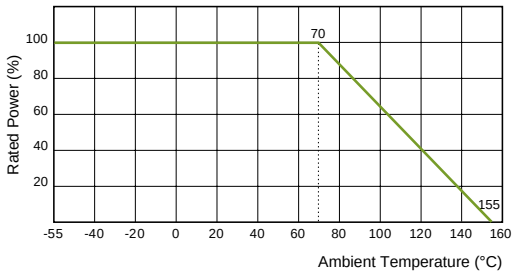

Construction

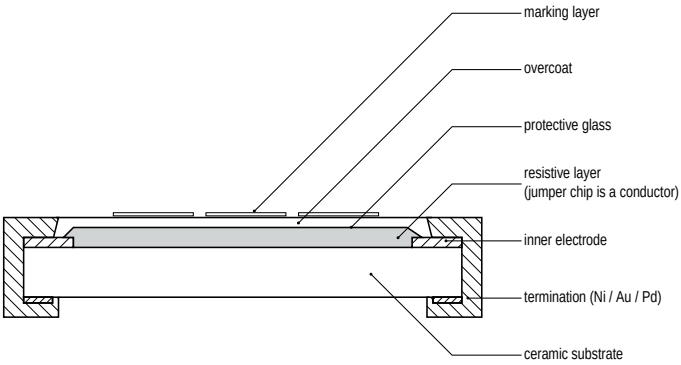

Dimensions

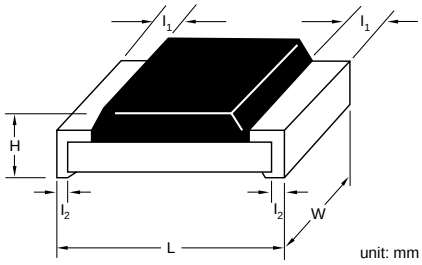

Type	L	W	H	l_1	l_2
AR0402	1.00 ±0.05	0.50 ±0.05	0.35 ±0.05	0.20 ±0.10	0.25 ±0.10
AR0603	1.60 ±0.10	0.80 ±0.10	0.45 ±0.10	0.25 ±0.15	0.25 ±0.15
AR0805	2.00 ±0.10	1.25 ±0.10	0.50 ±0.10	0.35 ±0.20	0.35 ±0.20
AR1206	3.10 ±0.10	1.60 ±0.10	0.55 ±0.10	0.45 ±0.20	0.40 ±0.20

Electrical characteristics											
Type	Power P_{70}	Operating Temp. range	MWV	RCOV	DWV	Resistance range & tolerance		T. C. R. (ppm/°C)		Jumper criteria (unit: A)	
AR0402	1/16W	-55°C to +155°C	50V	100V	100V	E24 ±5% E24/E96 ±1% Jumper	1Ω ≤ R ≤ 10MΩ 1Ω ≤ R ≤ 10MΩ < 0.05Ω	10Ω < R ≤ 10MΩ 1Ω ≤ R ≤ 10Ω	±100 ±200	Rated current Max. current	1.0 2.0
AR0603	1/10W	-55°C to +155°C	50V	100V	100V					Rated current Max. current	1.0 2.0
AR0805	1/8W	-55°C to +155°C	150V	300V	300V					Rated current Max. current	2.0 5.0
AR1206	1/4W	-55°C to +155°C	200V	500V	500V					Rated current Max. current	2.0 10.0

Environmental characteristics				
Performance test		Test method	Procedure	Requirements
Life		MIL-STD-202G-method 108A	1 000 hours at 70 ±5°C applied RCWV 1.5 hours on, 0.5 hours off, still air required	±(2% +0.05Ω) < 100mΩ for jumper
High temperature exposure		MIL-STD-202G-method 108A	1 000 hours at maximum operating temperature depending on specification, unpowered	±(1% +0.05Ω) < 50mΩ for jumper
Moisture resistance		MIL-STD-202G-method 106F	Each temperature / humidity cycle is defined as 8 hours (method 106F), 3 cycles / 24 hours for 10d with 25°C / 65°C 95% R.H	±(2% +0.05Ω) < 100mΩ for jumper
Thermal shock		MIL-STD-202G-method 107G	LCT / UCT, number of cycles required is 300 Maximum transfer time is 20 seconds	±(0.5% +0.05Ω) for 10K to 10M ±(1% +0.05Ω) for others < 50mΩ for jumper
Solderability	Wetting	J-STD-002B testB	Electrical test not required. Magnification 50X Lead-free solder bath at 245 ±3°C Dipping time: 3 ±0.5 seconds	Well tinned (≥95% covered) No visible damage
	Resistance to soldering heat	MIL-STD-202G-method 210F	Lead-free solder, 260°C, 10 seconds immersion time	±(1% +0.05Ω) < 50mΩ for jumper No visible damage
Short time overload		MIL-R-55342D-para 4.7.5	2.5 times RCWV or maximum overload voltage which-ever is less for 5 seconds at room temperature	±(2% +0.05Ω) < 50mΩ for jumper No visible damage

Global part number - Preferred type for ordering Yageo / Phycomp branded products

Ordering example: AR0603JR-07100KL

A R 0 6 0 3 J R — 0 7 1 0 0 K L

Series name (code 1-2)
AR = NiAu termination

Size code (code 3-6)
(inch / metric)
0402 = 1.0 x 0.5
0603 = 1.6 x 0.8
0805 = 2.0 x 1.25
1206 = 3.2 x 1.6

Tolerance (code 7)
F = ±1%
J = ±5% (for Jumper ordering)

Default code(1/2) (code 17)

Resistance (code 12-16)
0R = Jumper
10R = 10Ω
100R = 100Ω
100K = 100KΩ

Taping reel (code 10-11)
07 = 7 inch Dia. reel

T. C. R. (code 9)
"—" = Based on spec.
(— for thick film only)

Packing style (code 8)
R = Paper tape reel

Note: 1. All of our RSMD products are RoHS compliant. "LFP" of the internal 2D reel label mentions "Lead Free Process"
2. Letter L is system default code for ordering only

Phycomp worldwide - Traditional type

Chip resistors with Ni/Au terminations								
Size: inch (mm)	0402 (1005)		0603 (1608)		0805 (2012)		1206 (3216)	
Power	1/16 W		1/10 W		1/8 W		1/4 W	
Tolerance	+5%	+1%	+5%	+1%	+5%	+1%	+5%	+1%
Resistance	E24	E24 / E96	E24	E24 / E96	E24	E24 / E96	E24	E24 / E96
Packing	paper tape		paper tape		paper tape		paper tape	
Quantity 5 000	---	---	2322 702 11…L	2322 704 1….L	2322 730 11…	2322 734 1….L	2322 711 11...L	2322 729 1….L
10 000	2322 705 12…L	2322 706 2….	---	---	---	---	---	---
Jumper 5 000	---	---	2322 702 19001L	---	2322 730 19001L	---	2322 711 19001L	---
10 000	2322 705 19001 L	---	---	---	---	---	---	---

For ordering rules: See page 14 for E24 / E96 values and the last 4 or 3 digits of the 12NC catalogue number

Phycomp CTC ordering code - Traditional type - North America

Regional code for ordering Phycomp branded products. Please see page 13 for details.

Features

- Reduced size of final equipment
- Low assembly costs
- Higher component and equipment reliability
- Excellent performance at pulse loading

Derating curve

Maximum dissipation (P) in percentage of rated power as a function of the operating ambient temperature (T_{amb}).

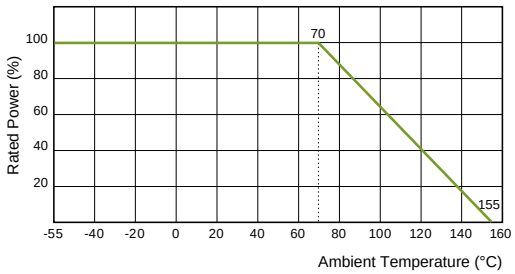

Construction

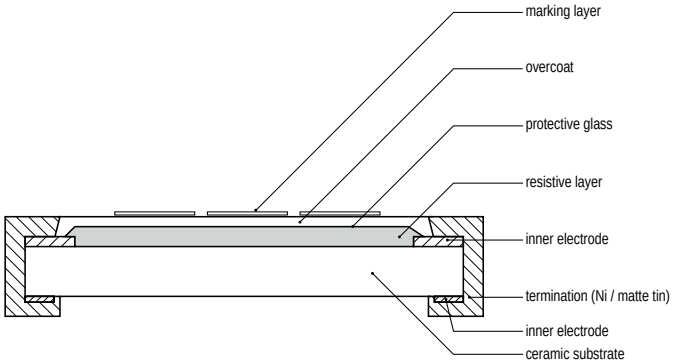

Dimensions

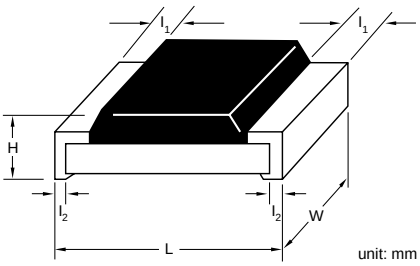

Type	L	W	H	l_1	l_2
SR0805	2.00 ±0.10	1.25 ±0.10	0.50 ±0.10	0.35 ±0.20	0.35 ±0.20
SR1206	3.10 ±0.10	1.60 ±0.10	0.55 ±0.10	0.45 ±0.20	0.40 ±0.20
SR1218	3.10 ±0.10	4.60 ±0.10	0.55 ±0.10	0.45 ±0.20	0.40 ±0.20
SR2010	5.00 ±0.10	2.50 ±0.15	0.55 ±0.10	0.55 ±0.15	0.50 ±0.20
SR2512	6.35 ±0.10	3.10 ±0.15	0.55 ±0.10	0.60 ±0.20	0.50 ±0.20

Surge chip resistors, 0805 to 2512

Electrical characteristics								
Type	Power P_{70}	Operating Temp. range	MWV	RCOV	DWV	Resistance range & tolerance		T. C. R.
SR0805	1/8W	-55°C to +155°C	150V	300V	300V	E24 ±5%, ±10%, ±20%	1Ω ≤ R ≤ 100KΩ	±200 ppm/°C
SR1206	1/4W	-55°C to +155°C	150V	400V	500V			
SR1218	1W	-55°C to +155°C	200V	400V	500V			
SR2010	3/4W	-55°C to +155°C	200V	400V	500V			
SR2512	1W	-55°C to +155°C	200V	400V	500V			

Environmental characteristics				
Performance test		Test method	Procedure	Requirements
Life		MIL-STD-202G-method 108A	1 000 hours at 70 ±5°C applied RCWV 1.5 hours on, 0.5 hours off, still air required	±(3% +0.05Ω)
High temperature exposure		MIL-STD-202G-method 108A	1 000 hours at maximum operating temperature depending on specification, unpowered	±(3% +0.05Ω)
Solderability	Wetting	J-STD-002B testB	Electrical test not required. Magnification 50X Lead-free solder bath at 245 ±3°C Dipping time: 3 ±0.5 seconds	Well tinned (≥95% covered) No visible damage
	Resistance to soldering heat	MIL-STD-202G-method 210F	Lead-free solder, 260°C, 10 seconds immersion time	±(1% +0.05Ω) No visible damage
Short time overload		MIL-R-55342-D-para 4.7.5	2.5 times RCWV or maximum overload voltage whichever is less for 5 seconds at room temperature	±(2% +0.05Ω) No visible damage

Pulse-Load behavior

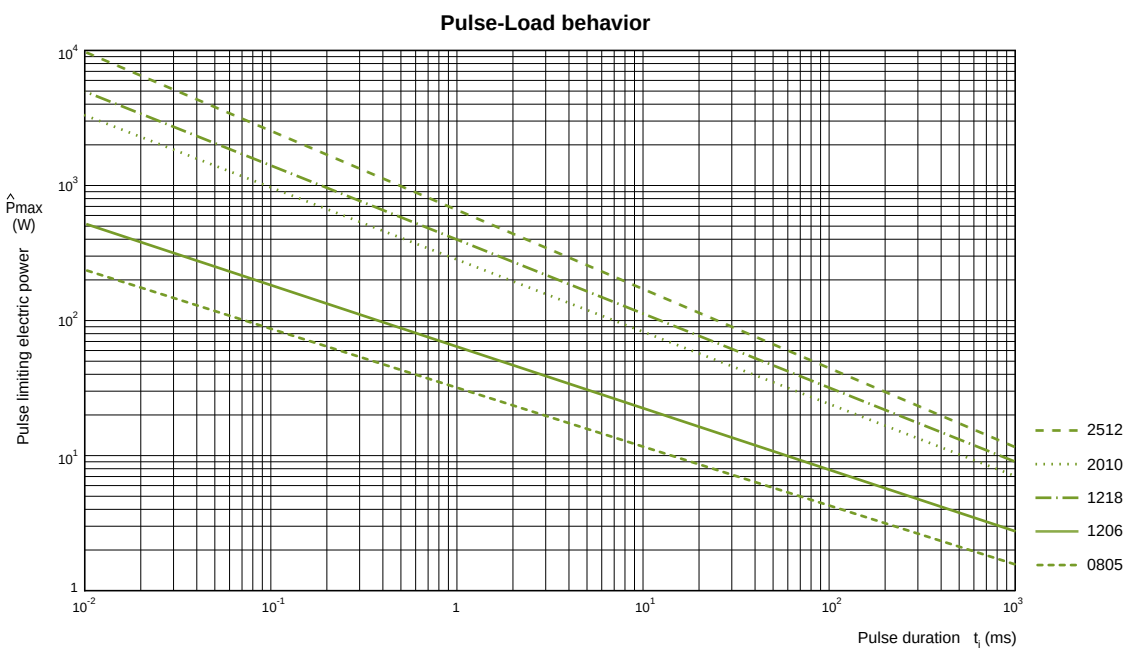

Global part number - Preferred type for ordering Yageo / Phycomp branded products

Ordering example: SR0805MR-07100KL

S R 0 8 0 5 M R — 0 7 1 0 0 K L

Series name (code 1-2)
SR = Surge

Size code (code 3-6)
(inch / metric)
0805 = 2.0 x 1.25
1206 = 3.2 x 1.6
1218 = 3.2 x 4.5
2010 = 5.0 x 2.5
2512 = 6.35 x 3.2

Tolerance (code 7)
J = ±5%
K = ±10%
M = ±20%

Default code(1/2) (code 17)

Resistance (code 12-16)
10R = 10Ω
100K = 100KΩ

Taping reel (code 10-11)
07 = 7 inch Dia. reel
10 = 10 inch Dia. reel
13 = 13 inch Dia. reel

T. C. R. (code 9)
"—" = Based on spec.
(— for thick film only)

Packing style (code 8)
R = Paper tape reel
K = Embossed plastic tape reel

Note: 1. All of our RSMD products are RoHS compliant. "LFP" of the internal 2D reel label mentions "Lead Free Process"
2. Letter L is system default code for ordering only

Phycomp worldwide - Traditional type

Surge chip resistors						
Size: inch (mm)	0805 (2012)	1206 (3216)	1218 (3248)	2512 (6432)		
Power	1/8 W	1/4 W	1 W	1 W		
Tolerance	+10%	+5%	+10%	+5%	+10%	+20%
Resistance	E24	E24	E24	E24	E24	E24
Packing	paper tape	paper tape	paper tape	paper tape	paper tape	paper tape
Quantity 4 000	---	---	2350 557 10…L	2350 556 11…L	2350 556 10…L	2350 556 13…L
5 000	2350 554 12…L	2350 550 10…L	---	---	---	---

For ordering rules: See page 14 for E24 / E96 values and the last 4 or 3 digits of the 12NC catalogue number

Phycomp CTC ordering code - Traditional type - North America

Regional code for ordering Phycomp branded products. Please see page 13 for details.

High voltage chip resistors, 0805 to 2512

Features

- Higher maximum working voltage compared to RC series
- Extremely thin and light
- Reliable electrode construction
- Compatible with lead containing and lead-free soldering processes
- Highly stable in auto-placement surface mounting

Derating curve

Maximum dissipation (P) in percentage of rated power as a function of the operating ambient temperature (T_{amb}).

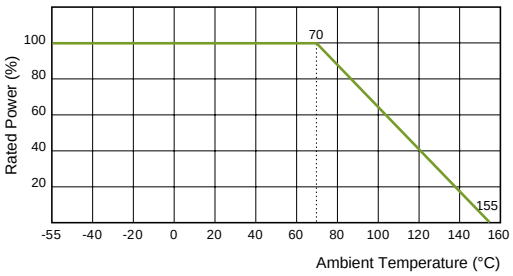

Construction

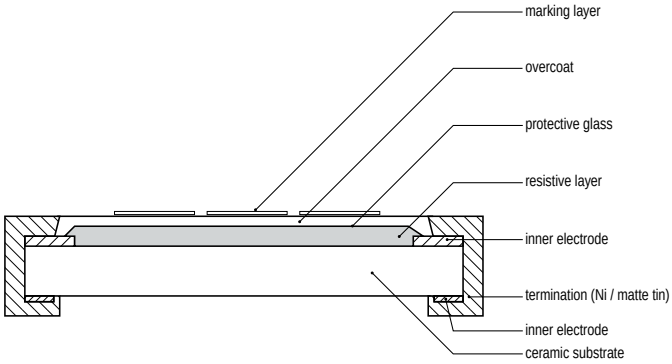

Dimensions

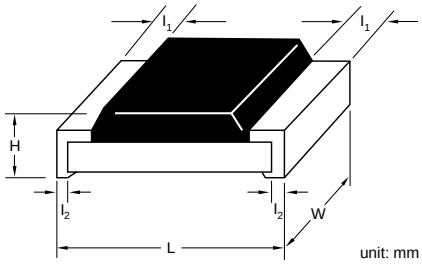

Type	L	W	H	l_1	l_2
RV0805	2.00 ±0.10	1.25 ±0.10	0.50 ±0.10	0.35 ±0.20	0.35 ±0.20
RV1206	3.10 ±0.10	1.60 ±0.10	0.55 ±0.10	0.40 ±0.20	0.40 ±0.20
RV2512	6.35 ±0.10	3.10 ±0.15	0.55 ±0.10	0.60 ±0.20	0.50 ±0.20

Electrical characteristics								
Type	Power P_{70}	Operating Temp. range	MWV	RCOV	DWV	Resistance range & tolerance		T. C. R.
RV0805	1/8W	-55°C to +155°C	400V	800V	800V	E24 ±5% E24/E96 ±1%	100KΩ ≤ R ≤ 10MΩ	±200 ppm/°C
RV1206	1/4W	-55°C to +155°C	500V	1000V	1000V	E24 ±5% E24/E96 ±1%	100KΩ ≤ R ≤ 27MΩ 100KΩ ≤ R ≤ 10MΩ	
RV2512	1W	-55°C to +155°C	500V	1000V	1000V	E24 ±5%	4.7MΩ ≤ R ≤ 16MΩ	

Environmental characteristics				
Performance test		Test method	Procedure	Requirements
Life		MIL-STD-202G-method 108A	1 000 hours at 70 ±5°C applied RCWV 1.5 hours on, 0.5 hours off, still air required	±(2% +0.05Ω)
High temperature exposure		MIL-STD-202G-method 108A	1 000 hours at maximum operating temperature depending on specification, unpowered	±(1% +0.05Ω)
Moisture resistance		MIL-STD-202G-method 106F	Each temperature / humidity cycle is defined as 8 hours (method 106F), 3 cycles / 24 hours for 10d with 25°C / 65°C 95% R.H	±(2% +0.05Ω)
Thermal shock		MIL-STD-202G-method 107G	LCT / UCT, number of cycles required is 300 Maximum transfer time is 20 seconds	±(0.5% +0.05Ω) for 10K to 10M ±(1% +0.05Ω) for others
Solderability	Wetting	J-STD-002B testB	Electrical test not required. Magnification 50X Lead-free solder bath at 245 ±3°C Dipping time: 3 ±0.5 seconds	Well tinned (≥95% covered) No visible damage
	Resistance to soldering heat	MIL-STD-202G-method 210F	Lead-free solder, 260°C, 10 seconds immersion time	±(1% +0.05Ω) No visible damage
Short time overload		MIL-R-55342-D-para 4.7.5	2.5 times RCWV or maximum overload voltage whichever is less for 5 seconds at room temperature	±(2% +0.05Ω) No visible damage

Global part number - Preferred type for ordering Yageo / Phycomp branded products

Ordering example: RV0805JR-07100KL

RV 0805 J R — 07 100K L

Series name (code 1-2)
RV = High voltage

Size code (code 3-6)
(inch / metric)
0805 = 2.0 x 1.25
1206 = 3.2 x 1.6
2512 = 6.35 x 3.2

Tolerance (code 7)
F = ±1%
J = ±5%

Packing style (code 8)
R = Paper tape reel
K = Embossed plastic tape reel

T. C. R. (code 9)
"—" = Based on spec.
(— for thick film only)

Taping reel (code 10-11)
07 = 7 inch Dia. reel

Resistance (code 12-16)
100K = 100KΩ
1M = 1MΩ

Default code(1/2) (code 17)

Note: 1. All of our RSMD products are RoHS compliant. "LFP" of the internal 2D reel label mentions "Lead Free Process"
2. Letter L is system default code for ordering only

Phycomp worldwide - Traditional type

High voltage chip resistors					
Size: inch (mm)	0805 (2012)		1206 (3216)		2512 (6432)
Power	1/8 W		1/4 W		1 W
Tolerance	+5%	+1%	+5%	+1%	+5%
Resistance	E24	E24 / E96	E24	E24 / E96	E24
Packing	paper tape		paper tape		blister tape
Quantity 4 000	---	---	---	---	2322 762 98...L
Quantity 5 000	2322 792 61...L	2322 793 6....L	2322 790 61...L	2322 791 6....L	---

For ordering rules: See page 14 for E24 / E96 values and the last 4 or 3 digits of the 12NC catalogue number

Phycomp CTC ordering code - Traditional type - North America

Regional code for ordering Phycomp branded products. Please see page 13 for details.

Features

- Reduced size of final equipment
- Low assembly costs
- Higher component and equipment reliability
- Improved performance at high frequency
- Low noise, when not trimmed

Derating curve

Maximum dissipation (P) in percentage of rated power as a function of the operating ambient temperature (T_{amb}).

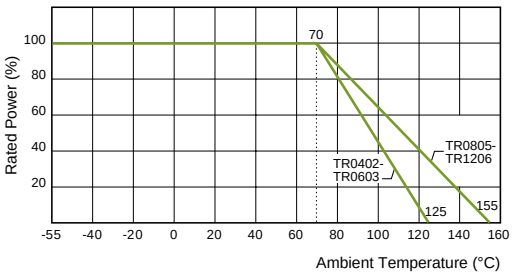

Construction

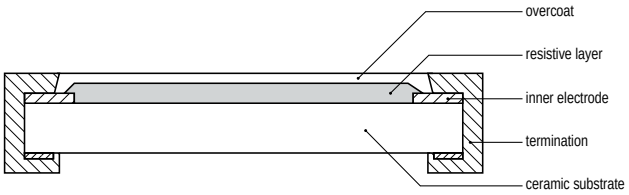

Dimensions

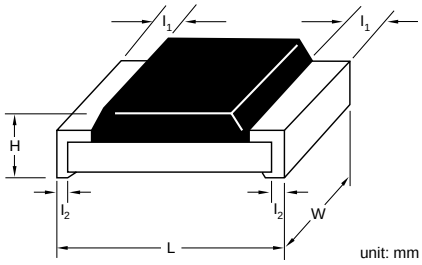

Type	L	W	H	l_1	l_2
TR0402	1.00 ±0.10	0.50 ±0.05	0.35 ±0.05	0.20 ±0.10	0.25 ±0.10
TR0603	1.60 ±0.10	0.80 ±0.10	0.45 ±0.10	0.25 ±0.15	0.25 ±0.15
TR0805	2.00 ±0.10	1.25 ±0.10	0.50 ±0.10	0.35 ±0.20	0.35 ±0.20
TR1206	3.10 ±0.10	1.60 ±0.10	0.55 ±0.10	0.45 ±0.20	0.40 ±0.20

Trimmable chip resistors, 0402 to 1206

Electrical characteristics									
Type	Power P_{70}	Operating Temp. range	MWV	RCOV	DWV	Resistance range & tolerance		T. C. R. (ppm/°C)	
TR0402	1/16W	-55°C to +125°C	50V	100V	100V	E24 +0/-10%, +0/-20%, +0/-30%	1Ω ≤ R ≤ 10MΩ	1Ω ≤ R ≤ 10Ω 10Ω < R ≤ 1MΩ 1MΩ < R ≤ 10MΩ	±200 ±100 ±200
TR0603	1/16W	-55°C to +125°C	50V	100V	100V				
TR0805	1/8W	-55°C to +155°C	150V	300V	500V				
TR1206	1/4W	-55°C to +155°C	200V	500V	500V				

Environmental characteristics				
Performance test		Test method	Procedure	Requirements
Life		MIL-STD-202G-method 108A	1 000 hours at 70 ±5°C applied RCWV 1.5 hours on, 0.5 hours off, still air required	±(1% +0.05Ω)
High temperature exposure		MIL-STD-202G-method 108A	1 000 hours at maximum operating temperature depending on specification, unpowered	±(1% +0.05Ω)
Moisture resistance		MIL-STD-202G-method 106F	Each temperature / humidity cycle is defined as 8 hours (method 106F), 3 cycles / 24 hours for 10d with 25°C / 65°C 95% R.H	±(2% +0.05Ω)
Thermal shock		MIL-STD-202G-method 107G	LCT / UCT, number of cycles required is 300 Maximum transfer time is 20 seconds	±(1% +0.05Ω)
Solderability	Wetting	J-STD-002B testB	Electrical test not required. Magnification 50X Lead-free solder bath at 245 ±3°C Dipping time: 3 ±0.5 seconds	Well tinned (≥95% covered) No visible damage
	Resistance to soldering heat	MIL-STD-202G-method 210F	Lead-free solder, 260°C, 10 seconds immersion time	±(1% +0.05Ω) No visible damage
Short time overload		MIL-R-55342-D-para 4.7.5	2.5 times RCWV or maximum overload voltage whichever is less for 5 seconds at room temperature	±(1% +0.05Ω) No visible damage

Global part number - Preferred type for ordering Yageo / Phycomp branded products

Ordering example: TR0603MR-07100KL

TR 0603 M R — 07 100K L

Series name (code 1-2)
TR = Trimmable

Size code (code 3-6)
(inch / metric)
0402 = 1.0 x 0.5
0603 = 1.6 x 0.8
0805 = 2.0 x 1.25
1206 = 3.2 x 1.6

Tolerance (code 7)
K = 0/-10%
M = 0/-20%
N = 0/-30%

Default code(1/2) (code 17)

Resistance (code 12-16)
10R = 10Ω
100R = 100Ω
100K = 100KΩ

Taping reel (code 10-11)
07 = 7 inch Dia. reel

T. C. R. (code 9)
"—" = Based on spec.
(— for thick film only)

Packing style (code 8)
R = Paper tape reel

Note: 1. All of our RSMD products are RoHS compliant. "LFP" of the internal 2D reel label mentions "Lead Free Process"
2. Letter L is system default code for ordering only

Phycomp worldwide - Traditional type

Trimmable chip resistors				
Size: inch (mm)	0402 (1005)	0603 (1608)	0805 (2012)	1206 (3216)
Power	1/16 W	1/10 W	1/8 W	1/4 W
Tolerance	E24	E24	E24	E24
Resistance	paper tape	paper tape	paper tape	paper tape
Packing	2350 503 21…L	2350 502 11…L	2350 501 11…L	2350 500 11…L
Quantity 5 000 0/-20%	2350 503 20…L	2350 502 10…L	2350 511 10…L	2350 500 10…L
5 000 0/-30%	on request	on request	on request	2322 724 94…L
Europe 5 000	2322 792 61...L	2322 793 6....L	2322 791 6....L	---

For ordering rules: See page 14 for E24 / E96 values and the last 4 or 3 digits of the 12NC catalogue number

Phycomp CTC ordering code - Traditional type - North America

Regional code for ordering Phycomp branded products. Please see page 13 for details.

Anti-sulfurated chip resistors, 0402 to 1206

Features

- Superior resistance against sulfur containing atmosphere
- Hightly reliable multilayer electrode construction
- Compatible with all soldering processes
- Highly stable in auto-placement surface mounting applications
- Barrier layer end termination
- Halogen free product and production

Derating curve

Maximum dissipation (P) in percentage of rated power as a function of the operating ambient temperature (T_{amb}).

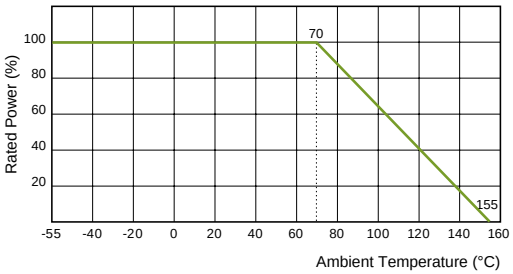

Construction

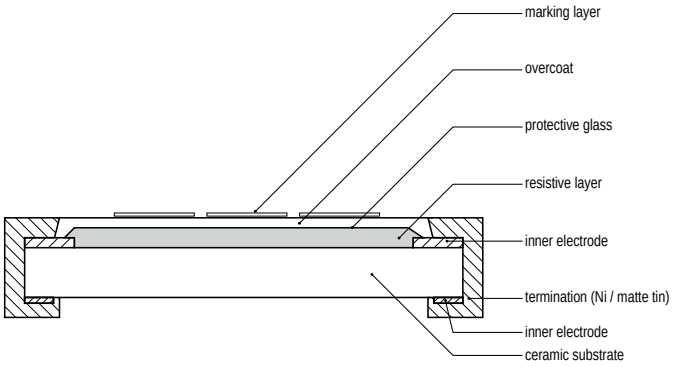

Dimensions

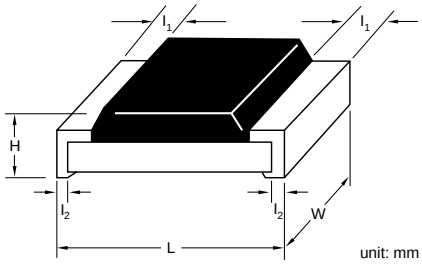

Type	L	W	H	l_1	l_2
AF0402	1.00 ±0.05	0.50 ±0.05	0.32 ±0.05	0.20 ±0.10	0.25 ±0.10
AF0603	1.60 ±0.10	0.80 ±0.10	0.45 ±0.10	0.25 ±0.15	0.25 ±0.15
AF0805	2.00 ±0.10	1.25 ±0.10	0.50 ±0.10	0.35 ±0.20	0.35 ±0.20
AF1206	3.10 ±0.10	1.60 ±0.10	0.55 ±0.10	0.45 ±0.20	0.40 ±0.20

Anti-sulfurated chip resistors, 0402 to 1206

Electrical characteristics											
Type	Power P_{70}	Operating Temp. range	MWV	RCOV	DWV	Resistance range & tolerance		T. C. R. (ppm/°C)		Jumper criteria (unit: A)	
AF0402	1/16W	-55°C to +155°C	50V	100V	100V	E24 ±5% E24/E96 ±1% Jumper	1Ω ≤ R ≤ 22MΩ 1Ω ≤ R ≤ 10MΩ < 0.05Ω	1Ω ≤ R ≤ 10Ω 10Ω < R ≤ 10MΩ 10MΩ < R ≤ 22MΩ	±200 ±100 ±200	Rated current Max. current	1.0 2.0
AF0603	1/10W	-55°C to +155°C	50V	100V	100V					Rated current Max. current	1.0 2.0
AF0805	1/8W	-55°C to +155°C	150V	300V	300V					Rated current Max. current	2.0 5.0
AF1206	1/4W	-55°C to +155°C	200V	400V	500V					Rated current Max. current	2.0 10.0

Environmental characteristics				
Performance test		Test method	Procedure	Requirements
Life		MIL-STD-202G-method 108A	1 000 hours at 70 ±5°C applied RCWV 1.5 hours on, 0.5 hours off, still air required	±(1% +0.05Ω) < 100mΩ for jumper
High temperature exposure		MIL-STD-202G-method 108A	1 000 hours at maximum operating temperature depending on specification, unpowered	±(1% +0.05Ω) < 100mΩ for jumper
Moisture resistance		MIL-STD-202G-method 106F	Each temperature / humidity cycle is defined as 8 hours (method 106F), 3 cycles / 24 hours for 10d with 25°C / 65°C 95% R.H	±(0.5% +0.05Ω) for 1% tol. ±(1% +0.05Ω) for 5% tol. < 100mΩ for jumper
Thermal shock		MIL-STD-202G-method 107G	LCT / UCT, number of cycles required is 300 Maximum transfer time is 20 seconds	±(0.5% +0.05Ω) for 1% tol. ±(1% +0.05Ω) for 5% tol. < 100mΩ for jumper
Solderability	Wetting	J-STD-002B testB	Electrical test not required. Magnification 50X Lead-free solder bath at 245 ±3°C Dipping time: 3 ±0.5 seconds	Well tinned (≥95% covered) No visible damage
	Resistance to soldering heat	MIL-STD-202G-method 210F	Lead-free solder, 260°C, 10 seconds immersion time	±(1% +0.05Ω) No visible damage
Short time overload		MIL-R-55342D-para 4.7.5	2.5 times RCWV or maximum overload voltage whichever is less for 5 seconds at room temperature	±(1% +0.05Ω) No visible damage
Anti-FOS		ASTM-B-809-95	Sulfur (saturated vapor) 1000 hours, 60±2°C, 91~93 %RH, Rating with no power	±(1% +0.05Ω)

Global part number - Preferred type

Ordering example: AF0603JR-07100KL

AF 0603 J R — 07 100K L

Series name (code 1-2)
AF = Anti-sulfurated

Size code (code 3-6)
(inch / metric)
0402 = 1.0 x 0.5
0603 = 1.6 x 0.8
0805 = 2.0 x 1.25
1206 = 3.2 x 1.6

Tolerance (code 7)
F = ±1%
J = ±5% (for Jumper ordering)

Packing style (code 8)
R = Paper tape reel

Default code(1/2) (code 17)

Resistance (code 12-16)
0R = Jumper
10R = 10Ω
100R = 100Ω
100K = 100KΩ

Taping reel (code 10-11)
07 = 7 inch Dia. reel
10 = 10 inch Dia. reel
13 = 13 inch Dia. reel

T. C. R. (code 9)
"—" = Based on spec.
(— for thick film only)

Note: 1. All our RSMD products meet RoHS Compliant. "LFP" of the internal 2D reel label mentions "Lead Free Process"
2. Letter L is system default code for order only
3. AF series products are available by "Global part number" only

Features

- AEC-Q200 compliant
- Production part approval process (PPAP) support
- High reliability
- High quality level
- Superior resistance against sulfur containing atmosphere

Derating curve

Maximum dissipation (P) in percentage of rated power as a function of the operating ambient temperature (T_{amb}).

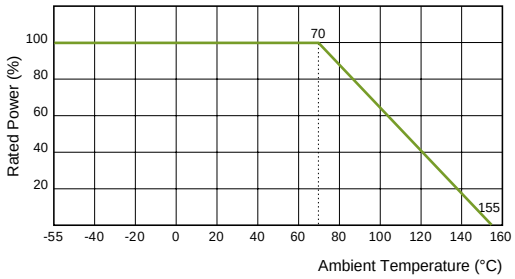

Construction

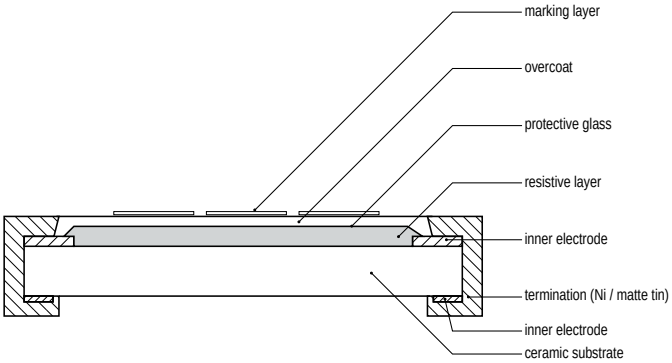

Dimensions

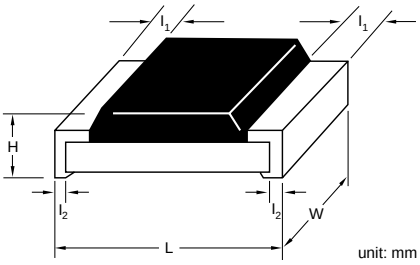

Type	L	W	H	l_1	l_2
AC0402	1.00 ±0.05	0.50 ±0.05	0.32 ±0.05	0.20 ±0.10	0.25 ±0.10
AC0603	1.60 ±0.10	0.80 ±0.10	0.45 ±0.10	0.25 ±0.15	0.25 ±0.15
AC0805	2.00 ±0.10	1.25 ±0.10	0.50 ±0.10	0.35 ±0.20	0.35 ±0.20
AC1206	3.10 ±0.10	1.60 ±0.10	0.55 ±0.10	0.45 ±0.20	0.40 ±0.20
AC1210	3.10 ±0.10	2.60 ±0.15	0.50 ±0.10	0.45 ±0.15	0.50 ±0.20
AC1218	3.10 ±0.10	4.60 ±0.10	0.55 ±0.10	0.45 ±0.20	0.40 ±0.20
AC2010	5.00 ±0.10	2.50 ±0.15	0.55 ±0.10	0.55 ±0.15	0.50 ±0.20
AC2512	6.35 ±0.10	3.10 ±0.15	0.55 ±0.10	0.60 ±0.20	0.50 ±0.20

Automotive grade chip resistors, 0402 to 2512

Electrical characteristics											
Type	Power P_{70}	Operating Temp. range	MWV	RCOV	DWV	Resistance range & tolerance		T. C. R. (ppm/°C)		Jumper criteria (unit: A)	
AC0402	1/16W	-55°C to +155°C	50V	100V	100V	E24 ±5% E24/E96 ±1% Jumper	1Ω ≤ R ≤ 10MΩ 1Ω ≤ R ≤ 10MΩ < 0.05Ω	1Ω ≤ R ≤ 10Ω 10Ω < R ≤ 10 MΩ	±200 ±100	Rated current Max. current	1.0 2.0
AC0603	1/10W	-55°C to +155°C	50V	100V	100V					Rated current Max. current	1.0 2.0
AC0805	1/8W	-55°C to +155°C	150V	300V	300V					Rated current Max. current	2.0 5.0
AC1206	1/4W	-55°C to +155°C	200V	400V	500V					Rated current Max. current	2.0 10.0
AC1210	1/2W	-55°C to +155°C	200V	500V	500V					Rated current Max. current	2.0 10.0
AC1218	1W	-55°C to +155°C	200V	500V	500V					Rated current Max. current	6.0 10.0
AC2010	3/4W	-55°C to +155°C	200V	500V	500V					Rated current Max. current	2.0 10.0
AC2512	1W	-55°C to +155°C	200V	500V	500V					Rated current Max. current	2.0 10.0

Environmental characteristics				
Performance test		Test method	Procedure	Requirements
Life		AEC-Q200-REV C-Test 8 MIL-STD-202 Method 108	1 000 hours at 125°C applied RCWV 1.5 hours on, 0.5 hours off	±(1% +0.05Ω) < 100mΩ for jumper
High temperature exposure		AEC-Q200-REV C-Test 3 MIL-STD-202 Method 108	1 000 hours at maximum operating temperature depending on specification	±(1% +0.05Ω) < 50mΩ for jumper
Moisture resistance		AEC-Q200-REV C-Test 6 MIL-STD-202 Method 106	Each temperature / humidity cycle is defined as 8 hours (method 106F), 3 cycles / 24 hours for 10d with 25°C / 65°C 95% R.H.	±(0.5% +0.05Ω) for 1% tol. ±(2% +0.05Ω) for 5% tol. < 100mΩ for jumper
Biased humidity		AEC-Q200-REV C-Test 7 MIL-STD-202 Method 103	1 000 hours; + 85°C 85% R.H.; 10% of operating power Measured at 24 ±2 hours after test	±(1% +0.05Ω) < 100mΩ for jumper
Thermal shock		AEC-Q200-REV C-Test 16 MIL-STD-202 Method 107	LCT / UCT, number of cycles required is 300 Maximum transfer time is 20 seconds	±(1% +0.05Ω) < 50mΩ for jumper
Solderability	Wetting	AEC-Q200-REV C-Test 18 J-STD-002B testB	Electrical test not required. Magnification 50X Lead-free solder bath at 245 ±3°C Dipping time: 3 ±0.5 seconds	Well tinned (≥95% covered) No visible damage
	Resistance to soldering heat	AEC-Q200-REV C-Test 15 MIL-STD-202 Method 215	Lead-free solder, 260°C, 10 seconds immersion time	±(1% +0.05Ω) < 50mΩ for jumper No visible damage
Short time overload		MIL-R-55342D- para 4.7.5	2.5 times RCWV or maximum overload voltage whichever is less for 5 seconds at room temperature	±(1% +0.05Ω) < 100mΩ for jumper No visible damage

Global part number - Preferred type

Ordering example: AC0603JR-07100KL

AC 0603 J R — 07 100K L

Series name (code 1-2)
- AC = Automotive grade

Size code (code 3-6)
(inch / metric)
- 0402 = 1.0 x 0.5
- 0603 = 1.6 x 0.8
- 0805 = 2.0 x 1.25
- 1206 = 3.2 x 1.6
- 1210 = 3.2 x 2.6
- 1218 = 3.2 x 4.5
- 2010 = 5.0 x 2.5
- 2512 = 6.35 x 3.2

Tolerance (code 7)
- F = ±1%
- J = ±5% (for jumper ordering)

Packing style (code 8)
- R = Paper tape reel
- K = Embossed plastic tape reel

Default code(1/2) (code 17)

Resistance (code 12-16)
- 0R = Jumper
- 10R = 10Ω
- 100R = 100Ω
- 100K = 100KΩ

Taping reel (code 10-11)
- 07 = 7 inch Dia. reel
- 10 = 10 inch Dia. reel
- 13 = 13 inch Dia. reel

T. C. R. (code 9)
- "—" = Based on spec.
- (— for thick film only)

Note: 1. All of our RSMD products are RoHS compliant. "LFP" of the internal 2D reel label mentions "Lead Free Process"
2. Letter L is system default code for ordering only
3. AC series products are available by "Global part number" only

RF attenuator chip resistors, 0404

Features

- Reduce system size
- Low assembly cost
- Higher component and system reliability
- Suitable for applications of mobile phones, receivers, battery chargers, palmtop computers and tablets

Derating curve

Maximum dissipation (P) in percentage of rated power as a function of the operating ambient temperature (T_{amb}).

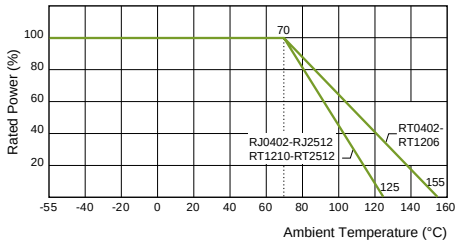

Construction

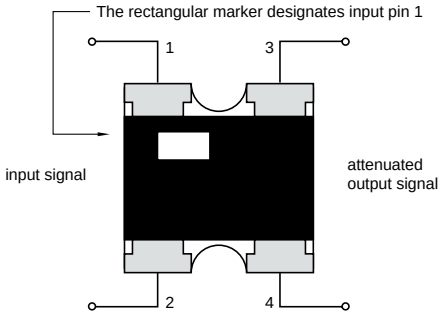

Schematics

ATV 321

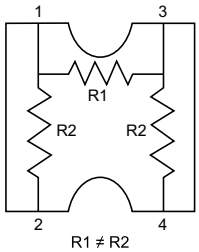

Dimensions

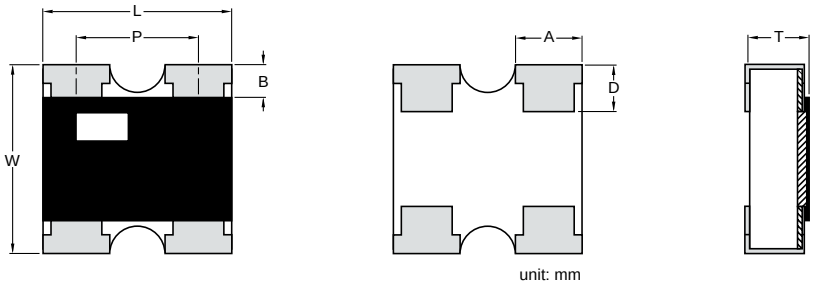

Type	L	W	T	A	B	P	D
ATV321	1.00 ±0.10	1.00 ±0.10	0.35 ±0.05	0.33 ±0.10	0.15 ±0.10	0.65 ±0.10	0.25 ±0.10

RF attenuator chip resistors, 0404

Electrical characteristics								
Type	Power P_{70}	Operating Temp. range	MPV	VSWR (Max.)	Impedance	Attenuation range & tolerance		Frequency range
ATV321	40mW	-55°C to +125°C	50V	1.3	50Ω	-1dB to -5dB	±0.3 dB	-1dB to -10dB DC to 2.5 GHz
						-6dB to -10dB	±0.5 dB	
						-15dB	±1.0 dB	-15dB to -20dB DC to 2.0 GHz
						-20dB	±2.0 dB	

Environmental characteristics				
Performance test		Test method	Procedure	Requirements
Life		MIL-STD-202G-method 108A	1 000 hours at 70 ±5°C applied RCWV 1.5 hours on, 0.5 hours off, still air required	Max.: ±0.3 dB
Humidity (steady state)		JIS C 5202 7.5	1 000 hours, 40 ±2°C, 93(+2/-3)% RH RCWV applied for 1.5 hours on and 0.5 hour off	Max.: ±0.3 dB
Moisture resistance		MIL-STD-202G-method 106F	Each temperature / humidity cycle is defined as 8 hours (method 106F), 3 cycles / 24 hours for 10d with 25°C / 65°C 95% R.H	Max.: ±0.3 dB
Thermal shock		MIL-STD-202G-method 107G	LCT / UCT, number of cycles required is 300 Maximum transfer time is 20 seconds	Max.: ±0.3 dB
Solderability	Wetting	J-STD-002B testB	Electrical test not required. Magnification 50X Lead-free solder bath at 245 ±3°C Dipping time: 3 ±0.5 seconds	Well tinned (≥95% covered)
	Resistance to soldering heat	MIL-STD-202G-method 210F	Lead-free solder, 260°C, 10 seconds immersion time	Max.: ±0.1 dB
Short time overload		MIL-R-55342-D-para 4.7.5	2.5 times RCWV or maximum overload voltage whichever is less for 5 seconds at room temperature	Max.: ±0.3 dB

RF attenuator chip resistors, 0404

Global part number - Preferred type for ordering Yageo / Phycomp branded products

Ordering example: ATV321CR-071DBL

AT V321 C R — 07 1DB L

Series name (code 1-2)
AT = RF attenuator thick film

Size code (code 3-6)
(inch / metric)
V321 = 0404 = 1.0 x 1.0

Tolerance (code 7)
C = ±0.3dB
D = ±0.5dB
F = ±1dB
G = ± 2dB

Packing style (code 8)
R = Paper tape reel

Default code(1/2) (code 16)

Attenuation (code 12-15)
0dB
-1dB
-2dB
-10dB
-15dB
-20dB

Taping reel (code 10-11)
07 = 7 inch Dia. reel

T. C. R. (code 9)
"—" = Based on spec.
(— for thick film only)

Note: 1. All of our RSMD products are RoHS compliant. "LFP" of the internal 2D reel label mentions "Lead Free Process"
2. Letter L is system default code for ordering only

Phycomp worldwide - Traditional type	
Packing	paper tape
Quantity 10 000	2350 703 11…L
Remark	For last three digits, see following table "Attenuation codes"

Note: L = Default code

Phycomp CTC ordering code - Traditional type - North America	
Packing	paper tape
Quantity 10 000	9CV3218AXXXXX-PF3
Remark	For last 9th to 13th digits, see following table "Attenuation codes"

Attenuation codes

Standard			
Value (dB)	Tolerance (dB)	Phycomp worldwide code (12NC)	Phycomp North America code (NA code)
1	±0.3	012	01DBC
2	±0.3	022	02DBC
3	±0.3	032	03DBC
4	±0.3	042	04DBC
5	±0.3	052	05DBC
6	±0.5	063	06DBD
7	±0.5	073	07DBD
8	±0.5	083	08DBD
9	±0.5	093	09DBD
10	±0.5	103	10DBD
15	±1.0	154	15DBF
20	±2.0	205	20DBG

Thick film chip resistors							
Global CTC (Preferred)	Description	Size	Tolerance	Max. power	Resistance range	Resistor pieces	Min. items
RC0100-R-SKE24L	RC0100, ±1% & ±5% , RoHS compliant, + Jumper	01005	F / J	1/32W	10 - 1M	100	100
RC0201-R-SKE24L	RC0201, ±1% & ±5% , RoHS compliant, + Jumper	0201	F / J	1/20 W	10 - 1M	100	120
RC0402JR-SKE24L	RC0402, ±5%, RoHS compliant, + Jumper	0402	J	1/16 W	10 - 1M	100	110
RC0402FR-SKE96L	RC0402, ±1%, RoHS compliant, + Jumper	0402	F	1/16 W	10 - 1M	100	450
RC0603JR-SKE24L	RC0603, ±5%, RoHS compliant, + Jumper	0603	J	1/10 W	10 - 1M	50	110
RC0603FR-SKE96L	RC0603, ±1%, RoHS compliant, + Jumper	0603	F	1/10 W	10 - 1M	50	450
RC0805JR-SKE24L	RC0805, ±5%, RoHS compliant, + Jumper	0805	J	1/8 W	10 - 1M	50	110
RC0805FR-SKE96L	RC0805, ±1%, RoHS compliant, + Jumper	0805	F	1/8 W	10 - 1M	50	280
RC1206JR-SKE24L	RC1206, ±5%, RoHS compliant, + Jumper	1206	J	1/4 W	10 - 1M	50	110
RC1206FR-SKE96L	RC1206, ±1%, RoHS compliant, + Jumper	1206	F	1/4 W	10 - 1M	50	350

Thick film array chip resistors (convex)							
Global CTC (Preferred)	Description	Size	Tolerance	Max. power	Resistance range	Resistor pieces	Min. items
YC12X-JR-SK001L	YC124 / YC122, ±5%, +Jumper, RoHS compliant,	0402 X 2 0402 X 4	J	1/16 W	10 - 1M	100	75

Engineering design kit for current sensing application							
Global CTC (Preferred)	Description	Size	Tolerance	Max. power	Resistance range	Resistor pieces	Min. items
CS0402-R-SK001L	RL0402 - RL2512, ±1% & ±5%, RoHS compliant	0402 - 2512	F / J	---	100m - 910m	30	160

Engineering design kit for mobile application							
Global CTC (Preferred)	Description	Size	Tolerance	Max. power	Resistance range	Resistor pieces	Min. items
MD0402-R-SK001L	Chip resistors / MLCC / Attenuators	---	---	---	---	50 - 100	44

Note: Before ordering, please contact our sales force for detail of resistance

Engineering design kit for automotive application							
Global CTC (Preferred)	Description	Size	Tolerance	Max. power	Resistance range	Resistor pieces	Min. items
AC0402-R-SK001L	AC0402 - AC1206, ±1% & ±5%, RoHS compliant, + Jumper	0402 - 1206	F/J	---	1 - 10M	50-100	200

SMD CERAMIC MULTILAYER CAPACITORS

Specification overview

Specification overview					
Description	TC code	Series	Capacitance range	Voltage range	Size
Discrete	NP0	General purpose	10 pF to 10 nF	16 V to 25 V	0201, 0402, 0603, 0805, 1206, 1210
		General purpose	0.47 pF to 22 nF	50 V	0201, 0402, 0603, 0805, 1206, 1210, 1812
		Medium voltage	10 pF to 10 nF	100 V to 630 V	0402, 0603, 0805, 1206, 1210
		High voltage	10 pF to 1 nF	1 kV to 3 kV	0805, 1206, 1808, 1812
		High frequency	0.22 pF to 8.2 pF	50 V	0402, 0603, 0805
	X7R	General purpose & High capacitance	100 pF to 47 µF	6.3 V to 50 V	0201, 0402, 0603, 0805, 1206, 1210, 1812
		Medium voltage	100 pF to 2.2 µF	100 V to 630 V	0603, 0805, 1206, 1210, 1812
		High voltage	100 pF to 33 nF	1 kV to 3 kV	1206, 1210, 1808, 1812
		Low inductance	10 nF to 220 nF	10 V to 50 V	0306, 0508, 0612
		Soft termination	100 pF to 1 µF	16 V to 630 V	0603, 0805,1206
	X5R	General purpose & High capacitance	100 pF to 100 µF	6.3 V to 50 V	0201, 0402, 0603, 0805, 1206, 1210, 1812
		Low profile	10 nF to 10 µF	6.3 V to 25 V	0402, 0603, 0805
	Y5V	General purpose & High capacitance	10 nF to 47 µF	6.3 V to 50 V	0201, 0402, 0603, 0805, 1206, 1210
Automotive grade products	NP0	Automotive grade	10 pF to 10 nF	50 V to 630 V	0402, 0603, 0805,1206, 1210
	X7R	Automotive grade	100 pF to 2.2 µF	16 V to 630 V	0402, 0603, 0805,1206, 1210
Safety certification products	NP0	High voltage SC type	2.0 pF to 470 pF	X1/Y2, X2/Y3	1808, 1812
	X7R	High voltage SC type	150 pF to 1.5 nF	X1/Y2, X2/Y3	1808, 1812
C-Arrays	NP0	4C arrays	10 pF to 470 pF	50 V	0508, 0612
	X7R	4C arrays	180 pF to 100 nF	16 V to 50 V	0508, 0612
	Y5V	4C arrays	10 nF to 100 nF	25 V	0612

Global part number

Ordering example: CC0201KRX7R8BB102

CC 0201 K R X7R 8 B B 102

Series name (code 1-2)
- CA = 4 x Capacitors array
- CC = Multilayer chip capacitors
- CL = Low inductance capacitors
- CH = High frequency
- SC = Safety certification capacitors
- AC = Automotive grade capacitors
- CS = Soft termination capacitors

Size code (code 3-6)
- 0201
- 0402
- 0603
- 0805
- 1206
- 1210
- 1808
- 1812
- 0306
- 0508
- 0612

Capacitance tolerance (code 7)
- B = ±0.1 pF
- C = ±0.25 pF
- D = ±0.5 pF
- F = ±1%
- G = ±2%
- J = ±5%
- K = ±10%
- M = ±20%
- Z = -20% to +80%

Packing style (code 8)
- R = Paper / PE tape reel Ø7 inch
- P = Paper / PE tape reel Ø13 inch
- K = Embossed plastic tape reel Ø7 inch
- F = Embossed plastic tape reel Ø13 inch
- C = Bulk case

TC material (code 9-11)
- NP0
- X5R
- X7R
- Y5V

Capacitance value (code 15-17)
- 102 = 1 000 pF
- (2 significant digits+number of zeros; the 3rd digit signifies the multiplying factor, and letter R is decimal point)
- 0 = x 1
- 1 = x 10^1
- 2 = x 10^2
- 3 = x 10^3
- 4 = x 10^4
- 5 = x 10^5
- 6 = x 10^6
- 7 = x 10^7
- X X R = Special capacitance
- (X X: capacitance before decimal point)

Process code (code 14)
- N = NP0
- B = Class 2 product

Termination (code 13)
- B = Ni-Barrier

Rated voltage (code 12)
- 5 = 6.3 V
- 6 = 10 V
- 7 = 16 V
- 8 = 25 V
- 9 = 50 V
- 0 = 100 V
- A = 200 V
- B = 500 V
- C = 1 kV
- D = 2 kV
- E = 3 kV
- G = 35 V
- S = 2.5 kV
- T = X2 / Y3 for TUV / UL (3 kV)
- W = X1 / Y2 for TUV / UL (4 kV)
- U = X1 / Y2 for TUV / UL (5 kV)
- Y = 250 V
- Z = 630 V

Ordering information - Global part number

Global part number

Ordering example: CCxxxxKRX5RxBBxxx (for Low profile)

C C 1 05 9 K R X 7 R 8 B B 1 0 2

Series name (code 1-2)
- CC = Multilayer chip capacitors
- CT = Low profile capacitors

Number of cap (code 3)
- 4 = 4 cap
- 2 = 2 cap
- 1 = Single

Size code (code 4-5)
- 01 = 0201
- 02 = 0402
- 03 = 0603
- 05 = 0805
- 06 = 1206, 0306
- 08 = 1808, 0508
- 10 = 1210
- 12 = 1812, 0612

Thickness (code 6)
- 3 = 0.3 mm
- 4 = 0.45 mm
- 5 = 0.5 mm
- 6 = 0.6 mm
- 8 = 0.8 mm
- 9 = 0.85 mm
- A = 1.0 mm
- B = 1.25 mm
- C = 1.6 mm
- D = 2.0 mm
- E = 2.5 mm
- F = 1.7 mm
- M = 1.15 mm
- N = 1.35 mm
- Q = 1.5 mm
- R = 1.8 mm

Capacitance tolerance (code 7)
- B = ±0.1 pF
- C = ±0.25 pF
- D = ±0.5 pF
- F = ±1%
- G = ±2%
- J = ±5%
- K = ±10%
- M = ±20%
- Z = -20% to +80%

Packing style (code 8)
- R = Paper / PE tape reel Ø7 inch
- P = Paper / PE tape reel Ø13 inch
- K = Embossed plastic tape reel Ø7 inch
- F = Embossed plastic tape reel Ø13 inch
- C = Bulk case

Capacitance value (code 15-17)
- 102 = 1 000 pF
- (2 significant digits+number of zeros; the 3rd digit signifies the multiplying factor, and letter R is decimal point)
- 0 = x 1
- 1 = x 10^1
- 2 = x 10^2
- 3 = x 10^3
- 4 = x 10^4
- 5 = x 10^5
- 6 = x 10^6
- 7 = x 10^7
- X X R = Special capacitance
- (X X: capacitance before decimal point)

Process code (code 14)
- N = NP0
- B = Class 2 product

Termination (code 13)
- B = Ni-Barrier

Rated voltage (code 12)
- 5 = 6.3 V
- 6 = 10 V
- 7 = 16 V
- 8 = 25 V
- 9 = 50 V
- 0 = 100 V
- A = 200 V
- B = 500 V
- C = 1 kV
- D = 2 kV
- E = 3 kV
- G = 35 V
- S = 2.5 kV
- Y = 250 V
- Z = 630 V

TC material (code 9-11)
- NP0
- X5R
- X7R
- Y5V

Ordering information - North America

Phycomp CTC ordering code - North America								
Ordering example: 02012R102K8B20D								
0201	**2R**	**102**	**K**	**8**	**B**	**2**	**0**	**0**
Size code	Temperature characteristic	Capacitance (pF)	Tolerance	Voltage	Termination	Packing	Marking	Range identifier
0201 0402 0603 0805 1206 1210 1808 1812 0306 0508 0612	CG = NP0 2B = X5R 2R = X7R 2F = Y5V	102 = 1 000 pF The third digit signifies the multiplying factor: 8 = x 0.01 9 = x 0.1 0 = x 1 1 = x 10 2 = x 100 3 = x 1 000 4 = x 10 000 5 = x 100 000 6 = x 1 000 000 7 = x 10 000 000	B = ±0.1 pF C = ±0.25 pF D = ±0.5 pF F = ±1% G = ±2% J = ±5% K = ±10% M = ±20% Z = -20% to +80%	5 = 6.3 V 6 = 10 V 7 = 16 V 8 = 25 V 9 = 50 V 0 = 100 V B = 200 V C = 250 V D = 500 V E = 1 kV F = 2 kV G = 3 kV Z = 630 V S = 2.5 kV T = X2/Y3 W = X1 U = Y2	B = NiSn	2 = 180mm / 7” paper / PE 3 = 330 mm / 13” paper / PE B = 180mm / 7” blister F = 330 mm / 13” blister P = Bulk case	0 = No marking	0 = Conventional ceramic D = Class 2 MLCC L = Low inductance S = Safety certification capacitor H = High frequency

Thickness classes and packing quantities for all series

Thickness classes and packing quantities

Description	Size code	Thickness classification (mm)	Quantity per reel					Quantity per bulk case
			Tape width	180 mm / 7”		330 mm / 13”		
				Paper	Blister	Paper	Blister	
Discrete capacitors	0201	0.3 ±0.03 / ±0.05	8 mm	15 000	---	50 000	---	---
	0402	0.5 ±0.05 / ±0.15 / ±0.20		10 000	---	50 000	---	50 000
	0603	0.8 ±0.1 / ±0.2		4 000	---	15 000	---	15 000
	0805	0.6 ±0.1		4 000	---	20 000	---	10 000
		0.85/1.0 ±0.1		4 000	---	15 000	---	8 000
		1.25 ±0.2		---	3 000	---	10 000	5 000
	1206	0.6 ±0.1		4 000	---	20 000	---	---
		0.85 ±0.1		4 000	---	15 000	---	---
		1.00 / 1.15 ±0.1		---	3 000	---	10 000	---
		1.25 ±0.2		---	3 000	---	10 000	---
		1.6 ±0.15		---	2 500	---	10 000	---
		1.6 ±0.2 / ±0.3		---	2 000	---	10 000	---
	1210	0.6 / 0.7 ±0.1		---	4 000	---	15 000	---
		0.85 ±0.1		---	4 000	---	10 000	---
		1.0 ±0.15		---	3 000	---	10 000	---
		1.15 ±0.1		---	3 000	---	10 000	---
		1.15 ±0.15		---	3 000	---	10 000	---
		1.25 ±0.2		---	3 000	---	---	---
		1.5 ±0.1		---	2 000	---	---	---
		1.6 / 1.9 ±0.2		---	2 000	---	---	---
		2.0 ±0.2		---	2 000 / 1 000	---	---	---
		2.5 ±0.2 / ±0.3		---	1 000 / 500	---	---	---
	1808	1.15 ±0.15	12 mm	---	3 000	---	---	---
		1.25 ±0.2		---	3 000	---	---	---
		1.35 ±0.15		---	2 000	---	---	---
		1.5 ±0.1		---	2 000	---	---	---
		1.6 ±0.2		---	2 000	---	8 000	---
		2.0 ±0.2		---	2 000	---	---	---
	1812	0.6 / 0.85 ±0.1		---	2 000	---	---	---
		1.15 ±0.1		---	1 000	---	---	---
		1.15 ±0.15		---	1 000	---	---	---
		1.25 ±0.2		---	1 000	---	---	---
		1.35 ±0.15		---	1 000	---	---	---
		1.5 ±0.1		---	1 000	---	---	---
		1.6 ±0.2		---	1 000	---	---	---
		2.0 ±0.2		---	1 000	---	---	---
Low inductance	0306	0.5 ±0.1	8 mm	4 000	---	15 000	---	---
	0508	0.85 ±0.1		4 000	---	15 000	---	---
	0612	0.85 ±0.1		4 000	---	15 000	---	---
Arrays	0508	0.6 ±0.1		4 000	---	---	---	---
	0612	0.8 ±0.1		4 000	---	---	---	---

Features

- Ultra-stable on capacitance
- Tight tolerance available
- High reliability
- Low ESR
- Good frequency performance
- No aging of capacitance

Temperature characteristic

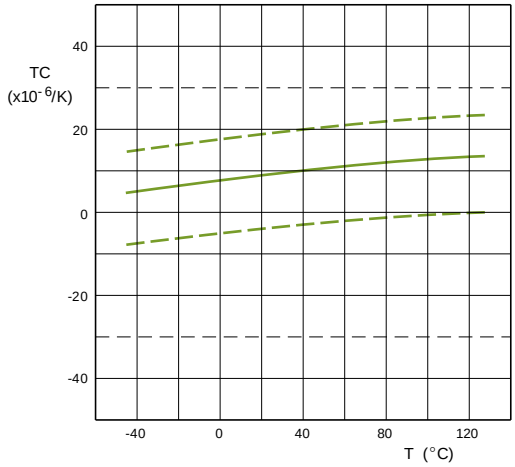

Construction

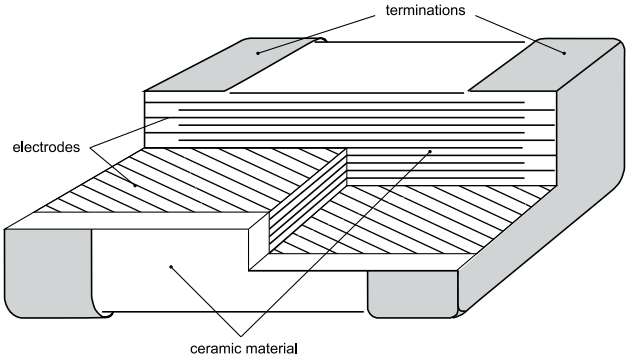

Case dimensions

Discrete capacitors - General purpose

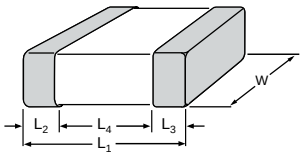

Case size designation		Dimensions in mm				
Inch-based	Metric	L_1	W	L_2 / L_3 min	L_2 / L_3 max	L_4 min
0201	0603M	0.6 ±0.03	0.3 ±0.03	0.10	0.20	0.20
0402	1005M	1.0 ±0.05	0.5 ±0.05	0.15	0.30	0.40
0603	1608M	1.6 ±0.10	0.8 ±0.10	0.20	0.60	0.40
0805	2012M	2.0 ±0.10 (1)	1.25 ±0.10 (1)	0.25	0.75	0.55
		2.0 ±0.20 (2)	1.25 ±0.20 (2)	0.25	0.75	0.55
1206	3216M	3.2 ±0.15 (1)	1.6 ±0.15 (1)	0.25	0.75	1.40
		3.2 ±0.30 (2)	1.6 ±0.20 (2)	0.25	0.75	1.40
1210	3225M	3.2 ±0.20 (1)	2.5 ±0.20 (1)	0.25	0.75	1.40
		3.2 ±0.40 (2)	2.5 ±0.30 (2)	0.25	0.75	1.40
1812	4532M	4.5 ±0.20 (1)	3.2 ±0.20 (1)	0.25	0.75	2.20
		4.5 ±0.40 (2)	3.2 ±0.40 (2)	0.25	0.75	2.20

Note: 1. Dimension for size 0805 to 1812, C ≤ 1 nF
2. Dimension for size 0805 to 1812, C > 1 nF

NP0 - General purpose 16 to 25V, 0201 to 0603

NP0						
General purpose						
Capacitance	Last 2-digit of 12NC	0201	0402		0603	
		25 V	16 V	25 V	16 V	25 V
10 pF	23	0.3 ±0.03	0.5 ±0.05	0.5 ±0.05	0.8 ±0.1	0.8 ±0.1
12 pF	24					
15 pF	25					
18 pF	26					
22 pF	27					
27 pF	28					
33 pF	29					
39 pF	31					
47 pF	32					
56 pF	33					
68 pF	34					
82 pF	35					
100 pF	36					
120 pF	37					
150 pF	38					
180 pF	39					
220 pF	41					
270 pF	42					
330 pF	43					
390 pF	44					
470 pF	45					
560 pF	46					
680 pF	47					
820 pF	48					
1 000 pF	49					
1.2 nF	51					
1.5 nF	52					
1.8 nF	53					
2.2 nF	54					
2.7 nF	55					
3.3 nF	56					
3.9 nF	57					
4.7 nF	58					
Tape width		8 mm				

Note: Values in shaded cells indicate thickness class (unit: mm)

NP0						
General purpose						
Capacitance	Last 2-digit of 12NC	0805		1206		1210
		16 V	25 V	16 V	25 V	25 V
10 pF	23	0.6 ±0.1	0.6 ±0.1	0.6 ±0.1	0.6 ±0.1	
12 pF	24					
15 pF	25					
18 pF	26					
22 pF	27					
27 pF	28					
33 pF	29					
39 pF	31					
47 pF	32					1.25 ±0.2
56 pF	33					
68 pF	34					
82 pF	35					
100 pF	36					
120 pF	37					
150 pF	38					
180 pF	39					
220 pF	41					
270 pF	42					
330 pF	43					
390 pF	44					
470 pF	45					
560 pF	46					
680 pF	47					
820 pF	48					
1 000 pF	49					
1.2 nF	51	0.85 ±0.1	0.85 ±0.1			
1.5 nF	52					
1.8 nF	53					
2.2 nF	54	1.25 ±0.2	1.25 ±0.2			
2.7 nF	55					
3.3 nF	56			0.85 ±0.1	0.85 ±0.1	1.0 ±0.15
3.9 nF	57					
4.7 nF	58					
5.6 nF	59					
6.8 nF	61					
8.2 nF	62			1.25 ±0.2	1.25 ±0.2	
10 nF	63					
12 nF	64					1.25 ±0.2
15 nF	65					
18 nF	66					
22 nF	67					1.6 ±0.2
33 nF	69			1.6 ±0.2		
Tape width		8 mm				

Note: Values in shaded cells indicate thickness class (unit: mm)

Global part number - Preferred type

Global Part Number is the preferred clear text code for ordering Yageo and Phycomp branded products.
For details, please see page 77.

12NC ordering code - Phycomp branded products only

2 2 X X X X X X 1 X X X

Carrier tape
- 50 = Blister (≥ 1kV)
- 22 = Blister
- 38 = Paper / PE
- 54 = Bulk

Voltage
- 78 = 16 V
- 91 = 25 V
- 60 = 100 V
- 93 = 200 V
- 83 = 250 V
- 97 = 500 V
- 98 = 630 V
- 00 = 1 kV
- 02 = 2 kV
- 99 = 2.5 kV
- 04 = 3 kV

Capacitance value
- See selection chart

Tolerance
- 4 = ±2%
- 5 = ±5%
- 6 = ±10%

TC material
- 1 = NP0

Packing
- 1 = 180 mm / 7” reel
- 5 = 330 mm / 13” reel
- 4 = Bulk case

Size
- 8 = 0201
- 7 = 0402
- 6 = 0603
- 0 = 0805
- 1 = 1206
- 2 = 1210
- 3 = 1808
- 4 = 1812

Phycomp CTC ordering code - North America

Regional code for ordering Phycomp branded products. For details, please see page 79.

NP0								
General purpose								
Capacitance	Last 3-digit of 12NC	0201	0402	0603	0805	1206	1210	1812
		50 V	50 V	50 V	50 V	50 V	50 V	50 V
0.47 pF	477	0.3 ±0.03	0.5 ±0.05	0.8 ±0.1	0.6 ±0.1	0.6 ±0.1		
0.56 pF	567							
0.68 pF	687							
0.82 pF	827							
1 pF	108							
1.2 pF	128							
1.5 pF	158							
1.8 pF	188							
2.2 pF	228							
2.7 pF	278							
3.3 pF	338							
3.9 pF	398							
4.7 pF	478							
5.6 pF	568							
6.8 pF	688							
8.2 pF	828							
10 pF	109							
12 pF	129							
15 pF	159							
18 pF	189							
22 pF	229							
27 pF	279							
33 pF	339							
39 pF	399							
47 pF	479						1.25 ±0.2	
56 pF	569							
68 pF	689							
82 pF	829							
100 pF	101							
120 pF	121							
150 pF	151							
180 pF	181							
220 pF	221							
270 pF	271							
330 pF	331							1.25 ±0.2
390 pF	391							
470 pF	471							
560 pF	561							
680 pF	681							
820 pF	821							
1 000 pF	102							
1.2 nF	122				0.85 ±0.1			
1.5 nF	152							
1.8 nF	182							
2.2 nF	222				1.25 ±0.2			
2.7 nF	272							
3.3 nF	332					0.85 ±0.1	1.0 ±0.15	
3.9 nF	392							

NP0 - Gerneral purpose 50V, 0201 to 1812

NP0								
General purpose								
Capacitance	Last 3-digit of 12NC	0201	0402	0603	0805	1206	1210	1812
		50 V	50 V	50 V	50 V	50 V	50 V	50 V
4.7 nF	472			0.80 ±0.1	1.25 ±0.2	0.85 ±0.1	1.0 ±0.15	1.25 ±0.2
5.6 nF	562							
6.8 nF	682							
8.2 nF	822					1.25 ±0.2		
10 nF	103							
12 nF	123						1.25 ±0.2	
15 nF	153							
18 nF	183							
22 nF	223						2.0 ±0.2	
Tape width		8 mm						12 mm

Note: Values in shaded cells indicate thickness class (unit: mm)

Global part number - Preferred type

Global Part Number is the preferred clear text code for ordering Yageo and Phycomp branded products.
For details, please see page 77.

12NC ordering code - Phycomp branded products only

2 2 X X X X X X X X X X

Carrier tape
- 22 = Blister
- 38 = Paper / PE
- 54 = Bulk

Voltage
- 86 = 50 V

Size
- 8 = 0201
- 9 = 0402
- 7 = 0603
- 1 = 0805
- 3 = 1206
- 2 = 1210
- 5 = 1812

Capacitance value
- See selection chart

Tolerance
- 4 = ±0.1 pF for 0.47 pF ≤ C < 5 pF
  ±0.25 pF for 5 pF ≤ C < 10 pF
  ±2% for C ≥ 10 pF
- 5 = ±0.25 pF for C < 5 pF
  ±0.5 pF for 5 pF ≤ C < 10 pF
  ±5% for C ≥ 10 pF
- 8 = ±0.1 pF for 5 pF ≤ C < 10 pF
  ±1% for C ≥ 10 pF

Packing
- 1 = 180 mm / 7” reel
- 7 = 330 mm / 13” reel
- 4 = Bulk case

Phycomp CTC ordering code - North America

Regional code for ordering Phycomp branded products. For details, please see page 79.

Features

- Capable of operating at high voltage levels
- For high frequency snubber
- Decoupling / smoothing function

Temperature characteristic

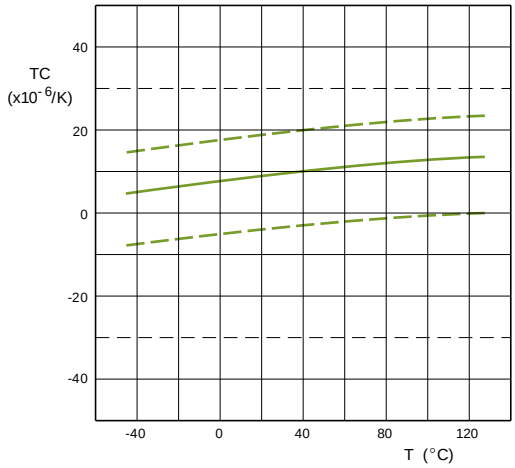

Construction

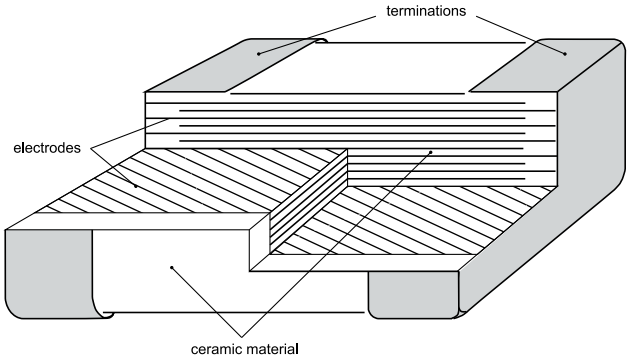

Dimensions

Discrete capacitors - Medium and High voltage

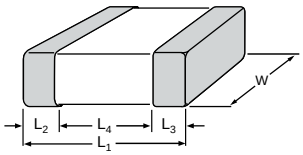

Case size designation		Dimensions in mm				
Inch-based	Metric	L_1	W	L_2 / L_3 min	L_2 / L_3 max	L_4 min
0402	1005M	1.0 ±0.05	0.5 ±0.05	0.15	0.30	0.40
0603	1608M	1.6 ±0.10	0.8 ±0.10	0.20	0.60	0.40
0805	2012M	2.0 ±0.20	1.25 ±0.20	0.25	0.75	0.55
1206	3216M	3.2 ±0.30	1.6 ±0.20	0.25	0.75	1.40
1210	3225M	3.2 ±0.40	2.5 ±0.30	0.25	0.75	1.40
1808	4520M	4.5 ±0.40	2.0 ±0.30	0.25	0.75	2.20
1812	4532M	4.5 ±0.40	3.2 ±0.30	0.25	0.75	2.20

NP0										
Medium voltage										
Capacitance	Last 2-digit of 12NC	0402	0603			0805				
		100V	100 V	200 V	250 V	100 V	200 V	250 V	500 V	630 V
10 pF	23	0.5 ±0.05	0.8 ±0.1	0.8 ±0.1	0.8 ±0.1	0.6 ±0.1	0.6 ±0.1	0.6 ±0.1	0.6 ±0.1	0.6 ±0.1
12 pF	24									
15 pF	25									
18 pF	26									
22 pF	27									
27 pF	28									
33 pF	29									
39 pF	31									
47 pF	32									
56 pF	33									
68 pF	34									
82 pF	35									
100 pF	36									
120 pF	37									
150 pF	38									
180 pF	39									
220 pF	41						0.85 ±0.1	0.85 ±0.1	0.85 ±0.1	0.85 ±0.1
270 pF	42									
330 pF	43									
390 pF	44									
470 pF	45									
560 pF	46								1.25 ±0.2	1.25 ±0.2
680 pF	47									
820 pF	48									
1 000 pF	49									
1.2 nF	51					0.85 ±0.1	1.25 ±0.2	1.25 ±0.2		
1.5 nF	52									
1.8 nF	53									
2.2 nF	54					1.25 ±0.2				
2.7 nF	55									
3.3 nF	56									
3.9 nF	57									
4.7 nF	58									
5.6 nF	59									
6.8 nF	61									
8.2 nF	62									
10 nF	63									
Tape width		8 mm								

Note: Values in shaded cells indicate thickness class (unit: mm)

NP0 - Medium voltage, 1206 / 1210

NP0											
		Medium voltage									
Capacitance	Last 2-digit of 12NC	1206					1210				
		100 V	200 V	250 V	500 V	630 V	100 V	200 V	250 V	500 V	630 V
10 pF	23	0.6 ±0.1	0.6 ±0.1	0.6 ±0.1	0.6 ±0.1	1.25 ±0.2					
12 pF	24										
15 pF	25										
18 pF	26										
22 pF	27										
27 pF	28										
33 pF	29										
39 pF	31										
47 pF	32						1.25 ±0.2	1.25 ±0.2	1.25 ±0.2	1.25 ±0.2	1.25 ±0.2
56 pF	33										
68 pF	34										
82 pF	35										
100 pF	36										
120 pF	37										
150 pF	38										
180 pF	39										
220 pF	41										
270 pF	42										
330 pF	43										
390 pF	44										
470 pF	45										
560 pF	46										
680 pF	47										
820 pF	48		0.85 ±0.1	0.85 ±0.1	0.85 ±0.1						
1 000 pF	49										
1.2 nF	51										
1.5 nF	52										
1.8 nF	53		1.25 ±0.2	1.25 ±0.2	1.25 ±0.2						
2.2 nF	54										
2.7 nF	55										
3.3 nF	56	0.85 ±0.1									
3.9 nF	57										
4.7 nF	58										
5.6 nF	59										
6.8 nF	61										
8.2 nF	62	1.25 ±0.2									
10 nF	63										
12 nF	64										
15 nF	65										
Tape width		8 mm									

Note: Values in shaded cells indicate thickness class (unit: mm)

NP0											
Medium voltage											
Capacitance	Last 2-digit of 12NC	1808					1812				
		100 V	200 V	250 V	500 V	630 V	100 V	200 V	250 V	500 V	630 V
10 pF	23										
12 pF	24										
15 pF	25										
18 pF	26										
22 pF	27										
27 pF	28										
33 pF	29										
39 pF	31										
47 pF	32										
56 pF	33										
68 pF	34										
82 pF	35										
100 pF	36										1.25 ±0.2
120 pF	37										
150 pF	38									1.25 ±0.2	
180 pF	39					1.25 ±0.2					
220 pF	41						1.25 ±0.2	1.25 ±0.2	1.25 ±0.2		
270 pF	42				1.25 ±0.2						
330 pF	43										
390 pF	44	1.25 ±0.2	1.25 ±0.2	1.25 ±0.2							
470 pF	45										
560 pF	46										
680 pF	47										
820 pF	48										
1 000 pF	49										
1.2 nF	51										
1.5 nF	52										
1.8 nF	53										
2.2 nF	54										
2.7 nF	55										
3.3 nF	56										
3.9 nF	57										
4.7 nF	58										
5.6 nF	59										
6.8 nF	61										
8.2 nF	62										
10 nF	63										
12 nF	64										
15 nF	65										
18 nF	66										
22 nF	67										
Tape width		12 mm									

Note: Values in shaded cells indicate thickness class (unit: mm)

NP0 - High voltage, 0805 to 1812

NP0											
High voltage											
Capacitance	Last 2-digit of 12NC	0805	1206	1210		1808			1812		
		1KV	1 kV	1 kV	2 kV	1 kV	2 kV	3 kV	1 kV	2 kV	3 kV
10 pF	23	0.85 ±0.1	1.25 ±0.2					1.6 ±0.2	1.25 ±0.2	1.25 ±0.2	1.25 ±0.2
12 pF	24										
15 pF	25										
18 pF	26										
22 pF	27										
27 pF	28										
33 pF	29			1.25 ±0.2	1.25 ±0.2	1.25 ±0.2	1.25 ±0.2				
39 pF	31										
47 pF	32										
56 pF	33										
68 pF	34										
82 pF	35										
100 pF	36										
120 pF	37										
150 pF	38										
180 pF	39							2.0 ±0.2			
220 pF	41										
270 pF	42										
330 pF	43										
390 pF	44										
470 pF	45										
560 pF	46										
680 pF	47										
820 pF	48										
1 000 pF	49										
1.2 nF	51										
1.5 nF	52										
1.8 nF	53										
2.2 nF	54										
2.7 nF	55										
Tape width		12 mm									

Note: Values in shaded cells indicate thickness class (unit: mm)

Global part number - Preferred type

Global Part Number is the preferred clear text code for ordering Yageo and Phycomp branded products.
For details, please see page 77.

12NC ordering code - Phycomp branded products only

2 2 X X X X X X 1 X X X

Carrier tape
- 50 = Blister (≥ 1kV)
- 22 = Blister
- 38 = Paper / PE
- 54 = Bulk

Voltage
- 78 = 16 V
- 91 = 25 V
- 60 = 100 V
- 93 = 200 V
- 83 = 250 V
- 97 = 500 V
- 98 = 630 V
- 00 = 1 kV
- 02 = 2 kV
- 99 = 2.5 kV
- 04 = 3 kV

Capacitance value
- See selection chart

Tolerance
- 4 = ±2%
- 5 = ±5%
- 6 = ±10%

TC material
- 1 = NP0

Packing
- 1 = 180 mm / 7” reel
- 5 = 330 mm / 13” reel
- 4 = Bulk case

Size
- 8 = 0201
- 7 = 0402
- 6 = 0603
- 0 = 0805
- 1 = 1206
- 2 = 1210
- 3 = 1808
- 4 = 1812

Phycomp CTC ordering code - North America

Regional code for ordering Phycomp branded products. For details, please see page 79.

NPO - High frequency, 0402 to 0805

Features

- Lowest ESR in high frequency
- Ultra small
- Noise filtering

ESR characteristic

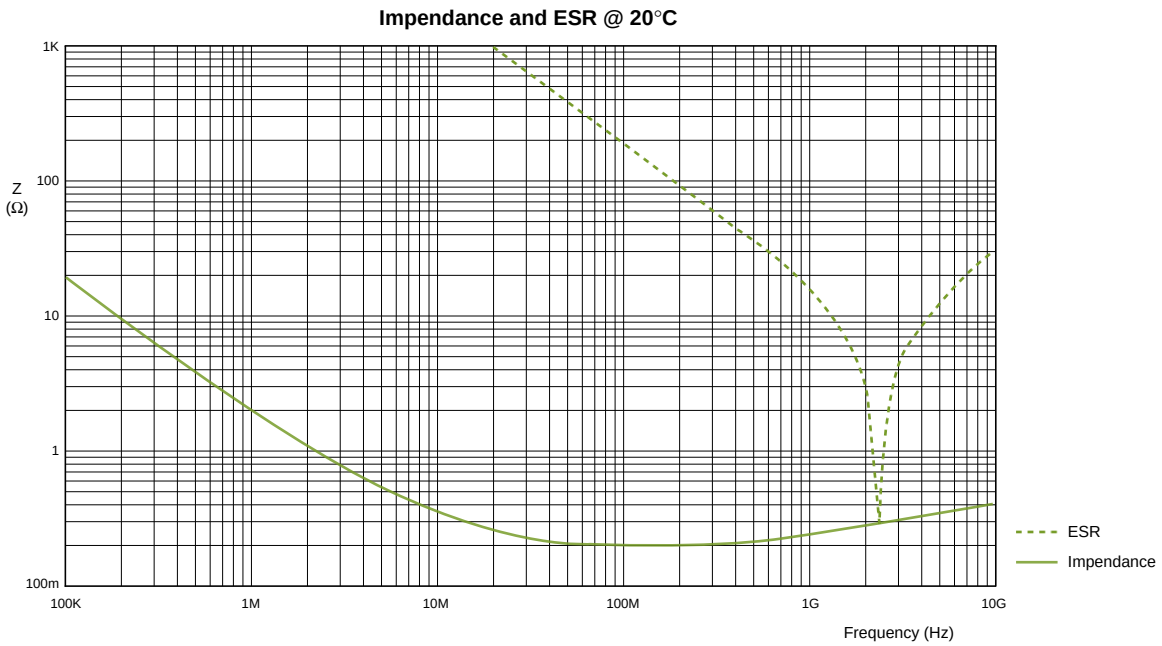

Construction

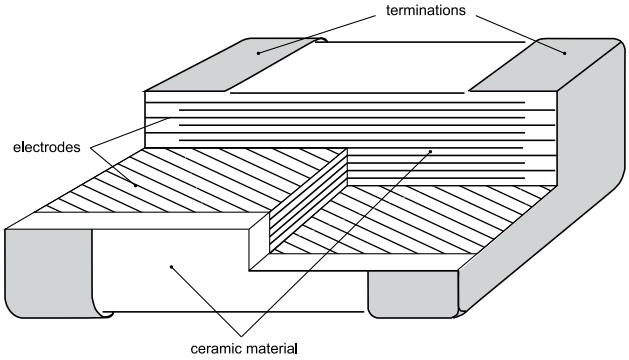

Case dimensions

Discrete capacitors - High Frequency

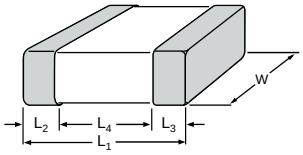

Case size designation		Dimensions in mm				
Inch-based	Metric	L_1	W	L_2 / L_3 min	L_2 / L_3 max	L_4 min
0402	1005M	1.0 ±0.05	0.5 ±0.05	0.15	0.30	0.40
0603	1608M	1.6 ±0.10	0.8 ±0.10	0.20	0.60	0.40
0805	2012M	2.0 ±0.10	1.25 ±0.10	0.25	0.75	0.55

NP0

High frequency				
Capacitance	Last 3-digit of 12NC	0402	0603	0805
		50 V	50 V	50 V
0.22 pF	227	0.5 ±0.05	0.8 ±0.1	0.6 ±0.1
0.47 pF	477			
0.56 pF	567			
0.68 pF	687			
0.82 pF	827			
1 pF	108			
1.2 pF	128			
1.5 pF	158			
1.8 pF	188			
2.2 pF	228			
2.7 pF	278			
3.3 pF	338			
3.9 pF	398			
4.7 pF	478			
5.6 pF	568			
6.8 pF	688			
8.2 pF	828			
10 pF	109			
12 pF	129			
15 pF	159			
18 pF	189			
22 pF	229			
27 pF	279			
33 pF	339			
39 pF	399			
47 pF	479			
56 pF	569			
68 pF	689			
82 pF	829			
100 pF	101			
Tape width		8 mm		

Note: Values in shaded cells indicate thickness class (unit: mm)

Global part number - Preferred type

Global Part Number is the preferred clear text code for ordering Yageo and Phycomp branded products.
For details, please see page 77.

12NC ordering code - Phycomp branded products only

2 2 X X X X X X X X X X

Carrier tape
- 22 = Blister
- 38 = Paper / PE
- 54 = Bulk

Voltage
- 84 = 50 V (for high frequency series)

Size
- 9 = 0402
- 7 = 0603
- 1 = 0805

Capacitance value
- See selection chart

Tolerance
- 4 = ±0.1 pF for 0.47 pF ≤ C < 5 pF
  ±0.25 pF for 5 pF ≤ C < 10 pF
  ±2% for C ≥ 10 pF
- 5 = ±0.25 pF for C < 5 pF
  ±0.5 pF for 5 pF ≤ C < 10 pF
  ±5% for C ≥ 10 pF
- 8 = ±0.1 pF for 5 pF ≤ C < 10 pF
  ±1% for C ≥ 10 pF

Packing
- 1 = 180 mm / 7” reel
- 7 = 330 mm / 13” reel
- 4 = Bulk case

Phycomp CTC ordering code - North America

Regional code for ordering Phycomp branded products. For details, please see page 79.

X7R - General purpose & High capacitance, 0201 to 1812

Features

- Semi-stable on capacitance and high K
- High volumetric efficiency
- Highly reliable in high temperature application
- High insulation resistance

Temperature characteristic

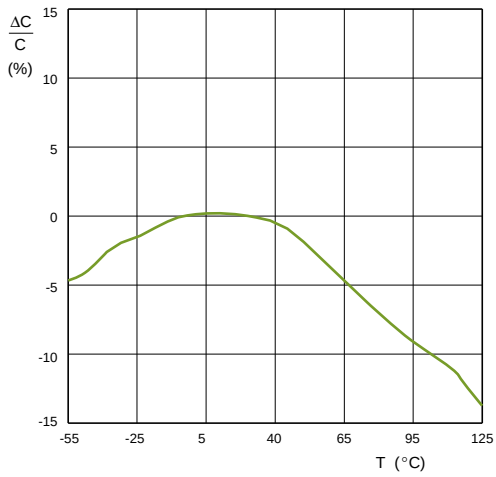

Construction

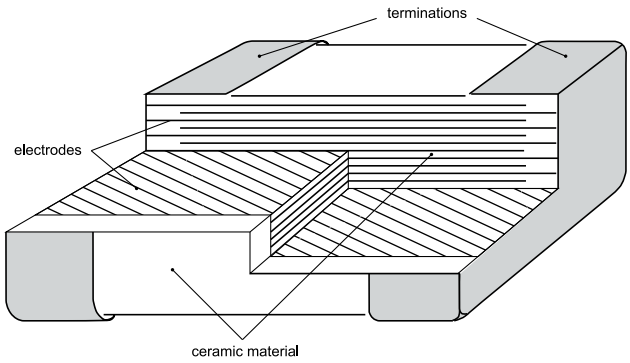

Case dimensions

Discrete capacitors - General purpose & High capacitance

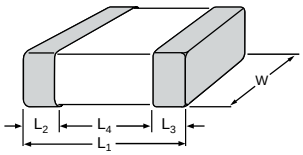

Case size designation		Dimensions in mm				
Inch-based	Metric	L_1	W	L_2 / L_3 min	L_2 / L_3 max	L_4 min
0201	0603M	0.6 ±0.03	0.3 ±0.03	0.10	0.20	0.20
		0.6 ±0.05	0.3 ±0.05	0.10	0.20	0.20
0402	1005M	1.0 ±0.05 (1)	0.5 ±0.05 (1)	0.15	0.30	0.40
		1.0 ±0.20 (2)	0.5 ±0.20 (2)	0.15	0.30	0.40
0603	1608M	1.6 ±0.10 (1)	0.8 ±0.10 (1)	0.20	0.60	0.40
		1.6 ±0.15 (2)	0.8 ±0.15 (2)	0.20	0.60	0.40
0805	2012M	2.0 ±0.10 (1)	1.25 ±0.10 (1)	0.25	0.75	0.55
		2.0 ±0.20 (2)	1.25 ±0.20 (2)	0.25	0.75	0.55
1206	3216M	3.2 ±0.15 (1)	1.6 ±0.15 (1)	0.25	0.75	1.40
		3.2 ±0.30 (2)	1.6 ±0.20 (2)	0.25	0.75	1.40
1210	3225M	3.2 ±0.20 (1)	2.5 ±0.20 (1)	0.25	0.75	1.40
		3.2 ±0.40 (2)	2.5 ±0.30 (2)	0.25	0.75	1.40
1808	4520M	4.5 ±0.40	2.0 ±0.30	0.25	0.75	2.20
1812	4532M	4.5 ±0.20 (1)	3.2 ±0.20 (1)	0.25	0.75	2.20
		4.5 ±0.40 (2)	3.2 ±0.40 (2)	0.25	0.75	2.20

Note: 1. Dimension for size 0402, C < 4.7 μF; 0603, C < 10 μF; 0805 to 1812, C ≤ 100 nF
2. Dimension for size 0402, C ≥ 4.7 μF; 0603, C ≥ 10 μF; 0805 to 1812, C > 100 nF

X7R - General purpose, 0201 / 0402

X7R											
General purpose											
Capacitance	Last 2-digit of 12NC	0201					0402				
		6.3 V	10 V	16 V	25 V	50 V	6.3 V	10 V	16 V	25 V	50 V
100 pF	09										
150 pF	12										
220 pF	14					0.3 ±0.03					
330 pF	16				0.3 ±0.03						
470 pF	18										
680 pF	21										
1 000 pF	23	0.3 ±0.03	0.3 ±0.03	0.3 ±0.03							0.5 ±0.05
1.5 nF	25										
2.2 nF	27										
3.3 nF	29						0.5 ±0.05	0.5 ±0.05	0.5 ±0.05	0.5 ±0.05	
4.7 nF	32										
6.8 nF	34										
10 nF	36										
15 nF	38										
22 nF	41										
33 nF	43										
47 nF	45										
68 nF	47										
100 nF	49										
150 nF	52										
220 nF	54						0.5 ±0.05	0.5 ±0.05	0.5 ±0.05		
330 nF	56										
470 nF	58						0.5 ±0.05				
680 nF	61										
1 000 nF	63						0.5 ±0.05 (X6S)				
Tape width		8 mm									

Note: Values in shaded cells indicate thickness class (unit: mm)

X7R - General purpose & High capacitance, 0603 / 0805

X7R											
General purpose & High capacitance											
Capacitance	Last 2-digit of 12NC	0603					0805				
		6.3 V	10 V	16 V	25 V	50 V	6.3 V	10 V	16 V	25 V	50 V
100 pF	09	0.8 ±0.1	0.8 ±0.1	0.8 ±0.1	0.8 ±0.1	0.8 ±0.1					
150 pF	12										
220 pF	14						0.6 ±0.1	0.6 ±0.1	0.6 ±0.1	0.6 ±0.1	0.6 ±0.1
330 pF	16										
470 pF	18										
680 pF	21										
1 000 pF	23										
1.5 nF	25										
2.2 nF	27										
3.3 nF	29										
4.7 nF	32										
6.8 nF	34										
10 nF	36										
15 nF	38										
22 nF	41										
33 nF	43						0.85 ±0.1	0.85 ±0.1	0.85 ±0.1	0.85 ±0.1	0.85 ±0.1
47 nF	45										
68 nF	47										
100 nF	49										
150 nF	52										
220 nF	54										1.25 ±0.2
330 nF	56						1.25 ±0.2	1.25 ±0.2	1.25 ±0.2	1.25 ±0.2	
470 nF	58										
680 nF	61										
1 000 nF	63										
2.2 µF	67										
4.7 µF	72										
10 µF	76										
Tape width		8 mm									

Note: Values in shaded cells indicate thickness class (unit: mm)

X7R - General purpose & High capacitance, 1206 to 1812

X7R											
General purpose & High capacitance											
Capacitance	Last 2-digit of 2NC	1206					1210				1812
		6.3 V	10 V	16 V	25 V	50 V	10 V	16 V	25 V	50 V	50 V
220 pF	14										
330 pF	16										
470 pF	18										
680 pF	21										
1 000 pF	23										
1.5 nF	25										
2.2 nF	27										
3.3 nF	29										
4.7 nF	32					0.85 ±0.1					
6.8 nF	34										
10 nF	36	0.85 ±0.1	0.85 ±0.1	0.85 ±0.1	0.85 ±0.1						0.85 ±0.1
15 nF	38									0.85 ±0.1	
22 nF	41						0.85 ±0.1	0.85 ±0.1	0.85 ±0.1		
33 nF	43										
47 nF	45										
68 nF	47										
100 nF	49										
150 nF	52					1.15 ±0.1				1.15 ±0.1	1.25 ±0.2
220 nF	54										
330 nF	56					1.0 ±0.1					
470 nF	58						1.15 ±0.1	1.15 ±0.1	1.15 ±0.1	1.25 ±0.2	1.6 ±0.2
680 nF	61	1.15 ±0.1	1.15 ±0.1	1.15 ±0.1	1.15 ±0.1	1.6 ±0.2					
1 000 nF	63						1.25 ±0.2	1.25 ±0.2	1.25 ±0.2		
2.2 µF	67						1.9 ±0.2	1.9 ±0.2	1.9 ±0.2	1.9 ±0.2	
4.7 µF	72	1.6 ±0.2	1.6 ±0.2	1.6 ±0.2	1.6 ±0.2						
10 µF	76						2.5 ±0.2	2.5 ±0.2	2.5 ±0.2	2.5 ±0.2	
22 µF	81										
47 µF	85										
Tape width		8 mm									12mm

Note: Values in shaded cells indicate thickness class (unit: mm)

X7R - Medium & High voltage, 0603 to 1812

Features

- Capable of operating at high voltage levels
- For high frequency snubber
- Decoupling / smoothing function

Temperature characteristic

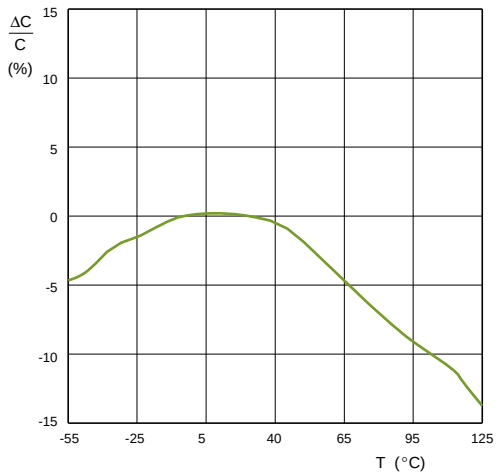

Construction

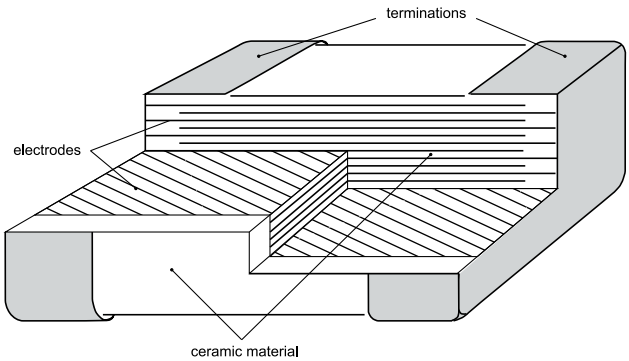

Dimensions

Discrete capacitors - Medium and High voltage

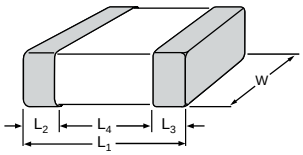

Case size designation		Dimensions in mm				
Inch-based	Metric	L_1	W	L_2 / L_3 min	L_2 / L_3 max	L_4 min
0603	1608M	1.6 ±0.10	0.8 ±0.10	0.20	0.60	0.40
0805	2012M	2.0 ±0.20	1.25 ±0.20	0.25	0.75	0.55
1206	3216M	3.2 ±0.30	1.6 ±0.20	0.25	0.75	1.40
1210	3225M	3.2 ±0.40	2.5 ±0.30	0.25	0.75	1.40
1808	4520M	4.5 ±0.40	2.0 ±0.30	0.25	0.75	2.20
1812	4532M	4.5 ±0.40	3.2 ±0.30	0.25	0.75	2.20

X7R - Medium voltage, 0603 / 0805

X7R						
Medium voltage						
Capacitance	Last 2-digit of 12NC	0603	0805			
		100V	100 V	200 V	250 V	500 V
100 pF	9	0.8 ±0.1				
150 pF	12					
220 pF	14		0.6 ±0.1	0.85 ±0.1	0.85 ±0.1	0.85 ±0.1
330 pF	16					
470 pF	18					
680 pF	21					
1 000 pF	23					
1.5 nF	25					
2.2 nF	27					
2.7 nF	28					
3.3 nF	29					
4.7 nF	32					
6.8 nF	34			1.25 ±0.2	1.25 ±0.2	
10 nF	36					1.25 ±0.2
15 nF	38		0.85 ±0.1			
22 nF	41					
33 nF	43		1.25 ±0.2			
47 nF	45					
68 nF	47					
100 nF	49					
220 nF	54					
Tape width		8 mm				

Note: Values in shaded cells indicate thickness class (unit: mm)

X7R - Medium voltage, 1206 / 1210

X7R											
Medium voltage											
Capacitance	Last 2-digit of 12NC	1206					1210				
		100V	200V	250V	500V	630V	100 V	200 V	250 V	500 V	630 V
220 pF	14										
330 pF	16										
470 pF	18										
680 pF	21										
1 000 pF	23										
1.5 nF	25										
2.2 nF	27		0.85 ±0.1	0.85 ±0.1	1.25 ±0.2	1.25 ±0.2					
3.3 nF	29	0.85 ±0.1									
4.7 nF	32							0.85 ±0.1	0.85 ±0.1		1.25 ±0.2
6.8 nF	34										
10 nF	36									1.25 ±0.2	
15 nF	38						0.85 ±0.1				
22 nF	41					1.6 ±0.2					1.6 ±0.2
33 nF	43		1.25 ±0.2	1.25 ±0.2	1.6 ±0.2						
47 nF	45										
68 nF	47							1.25 ±0.2	1.25 ±0.2		
100 nF	49	1.25 ±0.2	1.6 ±0.2	1.6 ±0.2							
150 nF	52										
220 nF	54						1.25 ±0.2				
330 nF	56										
470 nF	58	1.6 ±0.2									
680 nF	61										
1 000 nF	63						2.0 ±0.2				
2.2 µF	67										
Tape width		8 mm									

Note: Values in shaded cells indicate thickness class (unit: mm)

X7R - Medium voltage, 1812

X7R						
Medium voltage						
Capacitance	Last 2-digit of 12NC	1812				
		100 V	200 V	250 V	500 V	630 V
1 000 pF	23	0.85 ±0.1	0.85 ±0.1	0.85 ±0.1	1.25 ±0.2	1.25 ±0.2
1.5 nF	26					
2.2 nF	28					
3.3 nF	29					
4.7 nF	32					
6.8 nF	34					
10 nF	36					
15 nF	38					
22 nF	41					
33 nF	43		1.25 ±0.2	1.25 ±0.2		1.6 ±0.2
47 nF	45					
68 nF	47					
100 nF	49	1.25 ±0.2			1.6 ±0.2	
150 nF	52					
220 nF	54		1.6 ±0.2	1.6 ±0.2		
330 nF	56					
470 nF	58	1.6 ±0.2				
560 nF	59					
680 nF	61					
820 nF	62					
1 000 nF	63					
Tape width		12 mm				

Note: Values in shaded cells indicate thickness class (unit: mm)

X7R - High voltage, 1206 / 1210

X7R					
High voltage					
Capacitance	Last 2-digit of 12NC	1206		1210	
		1 kV	2 kV	1 kV	2 kV
100 pF	09				
150 pF	12				
220 pF	14	1.25 ±0.2	1.25 ±0.2		
330 pF	16				
470 pF	18				
680 pF	21				
1 000 pF	23			1.25 ±0.2	1.25 ±0.2
1.5 nF	25				
2.2 nF	27				
3.3 nF	29				
4.7 nF	32				
6.8 nF	34				
10 nF	36				
15 nF	38				
22 nF	41			1.6 ±0.2	
33 nF	43				
Tape width		8 mm			

Note: Values in shaded cells indicate thickness class (unit: mm)

X7R - High voltage, 1808 / 1812

X7R							
High voltage							
Capacitance	Last 2-digit of 12NC	1808			1812		
		1 kV	2 kV	3 kV	1 kV	2 kV	3 kV
150 pF	12			1.6 ±0.2			
220 pF	14						
330 pF	16	1.35 ±0.2	1.35 ±0.2				
470 pF	18						
680 pF	21						
1 000 pF	23			2.0 ±0.2	1.35 ±0.2	1.35 ±0.2	1.6 ±0.2
1.5 nF	25						
2.2 nF	27		1.6 ±0.2				
3.3 nF	29						
4.7 nF	32						
6.8 nF	34	1.6 ±0.2				1.6 ±0.2	
10 nF	36					2.0 ±0.2	
15 nF	38						
22 nF	41						
33 nF	43				1.6 ±0.2		
Tape width		12 mm					

Note: Values in shaded cells indicate thickness class (unit: mm)

Global part number - Preferred type

Global Part Number is the preferred clear text code for ordering Yageo and Phycomp branded products.
For details, please see page 77.

12NC ordering code - Phycomp branded products only

2 2 X X X X X X X X X X

Carrier tape
- 38 = Paper / PE (≥10 V)
- 22 = Blister (≥10 V)
- 50 = Blister (6.3 V / ≥1 kV)
- 55 = Paper / PE (6.3 V / ≥1 kV)
- 54 = Bulk

Voltage
- 20 = 6.3 V
- 24 = 10 V
- 78 = 16 V
- 91 = 25 V
- 58 = 50 V
- 60 = 100 V
- 93 = 200 V
- 83 = 250 V
- 97 = 500 V
- 98 = 630 V
- 00 = 1 kV
- 02 = 2 kV
- 99 = 2.5 kV
- 04 = 3 kV

Size
- 8 = 0201
- 7 = 0402
- 6 = 0603
- 0 = 0805
- 1 = 1206
- 2 = 1210
- 3 = 1808
- 4 = 1812

Capacitance value
- See selection chart

Tolerance
- 5 = ±5%
- 6 = ±10%
- 7 = ±20%

TC material
- 5 = X7R

Packing
- 1 = 180 mm / 7” reel
- 5 = 330 mm / 13” reel
- 4 = Bulk case

Phycomp CTC ordering code - North America

Regional code for ordering Phycomp branded products. For details, please see page 79.

X7R - Low inductance, 0306 to 0612

Features

- Good solution for anti resonance reduction with controlled ESR
- Suitable for high speed IC decoupling due to low inductance type

Temperature characteristic

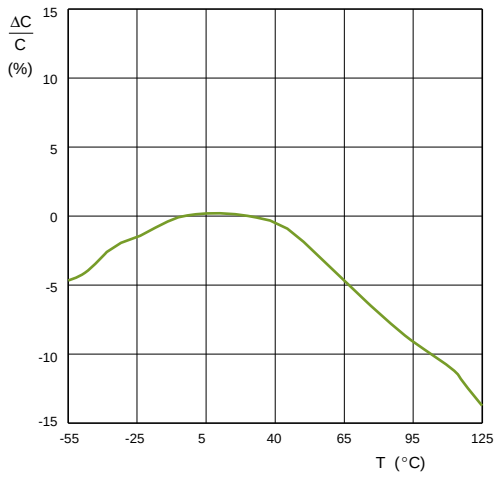

Construction

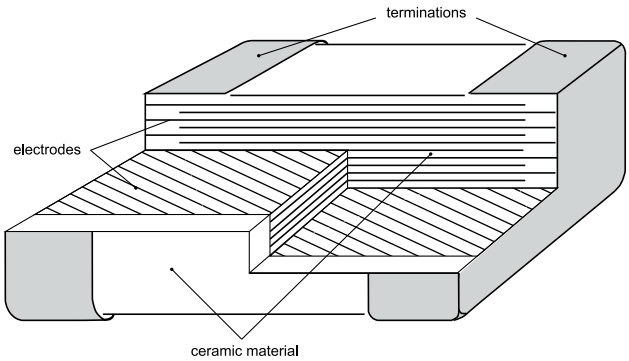

Dimensions

Discrete capacitors - Low inductance types only

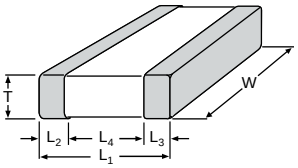

Case size designation		Dimensions in mm					
Inch-based	Metric	L_1	W	T	L_2 / $L_{3\ min}$	L_2 / $L_{3\ max}$	$L_{4\ min}$
0306	0816M	0.8 ±0.15	1.6 ±0.20	0.50 ±0.10	0.10	0.30	0.20
0508	1220M	1.25 ±0.20	2.0 ±0.20	0.85 ±0.10	0.13	0.46	0.38
0612	1632M	1.6 ±0.20	3.2 ±0.20	0.85 ±0.10	0.13	0.46	0.50

X7R - Low inductance, 0306 to 0612

X7R					
Low inductance					
Capacitance	Last 2-digit of 12NC	0306	0508	0508	0612
		10 V	16 V	25 V	50 V
10 nF	36			0.85 ±0.1	0.85 ±0.1
22 nF	41				
47 nF	45				
100 nF	49	0.5 ±0.1	0.85 ±0.1		
220 nF	54				
Tape width		8 mm			

Note: Values in shaded cells indicate thickness class (unit: mm)

Global part number - Preferred type

Global Part Number is the preferred clear text code for ordering Yageo and Phycomp branded products.
For details, please see page 77.

12NC ordering code - Phycomp branded products only

2 2 X X X X X X 5 X X X

Carrier tape
- 55 = Paper / PE

Voltage
- 09 = 10 V
- 08 = 16 V
- 07 = 25 V
- 06 = 50V

Size
- 2 = 0306
- 1 = 0508
- 0 = 0612

Capacitance value
- See selection chart

Tolerance
- 6 = ±10%
- 7 = ±20%

Packing
- 1 = 180 mm / 7” reel
- 5 = 330 mm / 13” reel

Phycomp CTC ordering code - North America

Regional code for ordering Phycomp branded products. For details, please see page 79.

X7R - Soft termination, 0603 to 1206

Features

- Flexible termination system
- Improved resistance to thermal stresses
- Increased mechanical performance

Temperature characteristic

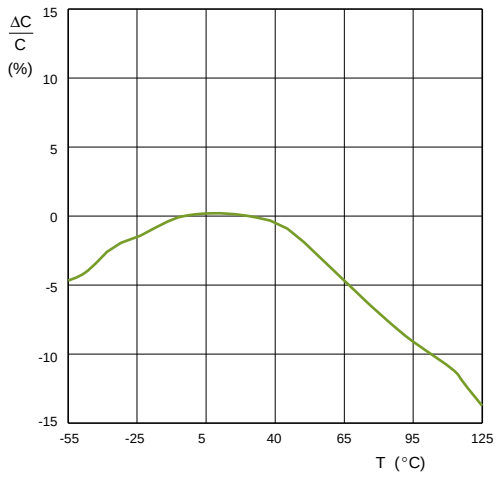

Construction

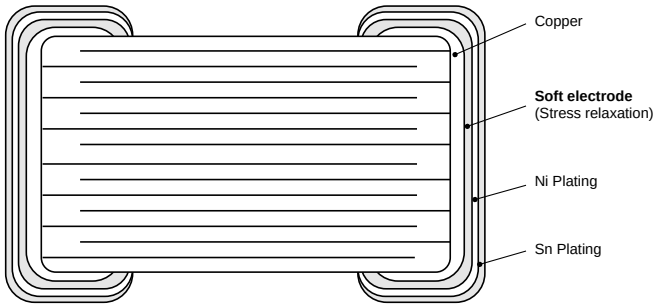

Dimensions

Discrete capacitors - Soft termination

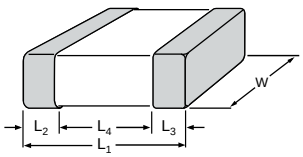

Case size designation		Dimensions in mm				
Inch-based	Metric	L1	W	L2 / L3 min	L2 / L3 max	L4 min
0603	1608M	1.6 ±0.20	0.8 ±0.15	0.20	0.50	0.40
0805	2012M	2.0 ±0.30	1.25 ±0.20	0.25	0.75	0.55
1206	3216M	3.2 ±0.40	1.6 ±0.20	0.25	0.85	1.40

X7R - Soft termination, 0603 / 0805

X7R											
Soft termination											
Capacitance	Last 2-digit of 12NC	0603				0805					
		16 V	25 V	50 V	100 V	16 V	25 V	50 V	100 V	200 V	250 V
100 pF	09	0.8 ±0.1	0.8 ±0.1	0.8 ±0.1	0.8 ±0.1	0.6 ±0.1	0.6 ±0.1	0.6 ±0.1	0.6 ±0.1	0.85 ±0.1	0.85 ±0.1
150 pF	12										
180 pF	13										
220 pF	14										
330 pF	16										
390 pF	17										
470 pF	18										
680 pF	21										
1 000 pF	23										
1.5 nF	25										
2.2 nF	27										
3.3 nF	29										
4.7 nF	32										
6.8 nF	34									1.25 ±0.2	1.25 ±0.2
10 nF	36										
15 nF	38								0.85 ±0.1		
18 nF	39										
22 nF	41										
27 nF	42							0.85 ±0.1			
33 nF	43										
47 nF	45					0.85 ±0.1	0.85 ±0.1				
68 nF	47										
100 nF	49										
150 nF	52										
220 nF	54										
270 nF	55										
330 nF	56										
390 nF	57										
470 nF	58										
680 nF	61										
1 000 nF	63										
Tape width		8mm									

Note: Values in shaded cells indicate thickness class (unit: mm)

X7R										
Soft termination										
Capacitance	Last 2-digit of 12NC	1206								
		16V	25V	50V	100V	200V	250V	500V	630V	1KV
100 pF	09									
150 pF	12									
180 pF	13									
220 pF	14	0.85 ±0.1	0.85 ±0.1	0.85 ±0.1	0.85 ±0.1	0.85 ±0.1	0.85 ±0.1	1.25 ±0.2	1.25 ±0.2	1.25 ±0.2
330 pF	16									
390 pF	17									
470 pF	18									
680 pF	21									
1 000 pF	23									
1.5 nF	25									
2.2 nF	27									
3.3 nF	29									
4.7 nF	32									
6.8 nF	34									
10 nF	36									
15 nF	38									
18 nF	39					1.25 ±0.2	1.25 ±0.2			
22 nF	41									
27 nF	42									
33 nF	43									
47 nF	45									
68 nF	47				1.25 ±0.2					
100 nF	49									
150 nF	52			1.15 ±0.2						
220 nF	54									
270 nF	55		1.15 ±0.2							
330 nF	56									
390 nF	57									
470 nF	58	1.15 ±0.2								
680 nF	61									
1 000 nF	63									
Tape width		8mm								

Note: Values in shaded cells indicate thickness class (unit: mm)

X5R - General purpose & High capacitance, 0201 to 1812

Features

- Semi-stable on capacitance and high K
- High volumetric efficiency
- Highly reliable in high temperature application
- High insulation resistance

Temperature characteristic

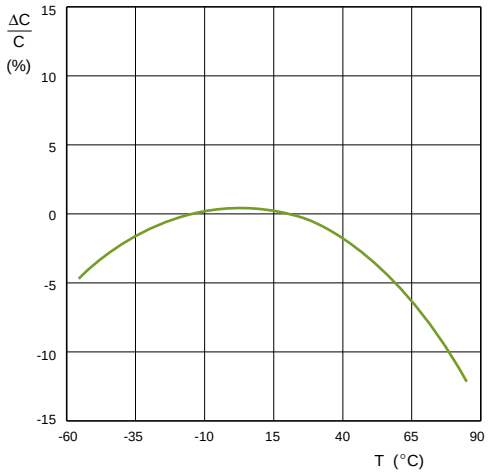

Construction

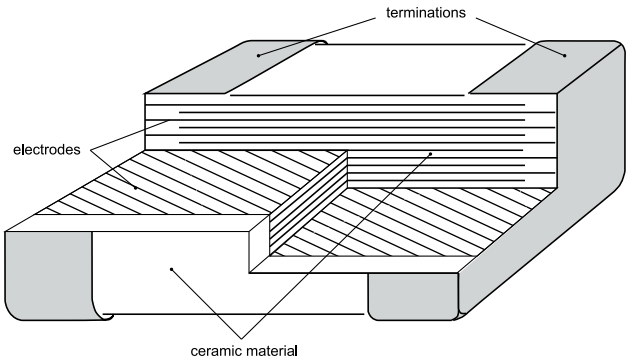

Case dimensions

Discrete capacitors - General purpose & High capacitance

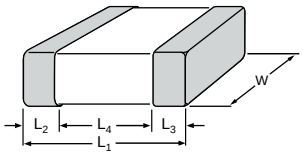

Case size designation		Dimensions in mm				
Inch-based	Metric	L_1	W	L_2 / L_3 min	L_2 / L_3 max	L_4 min
0201	0603M	0.6 ±0.03 (1)	0.3 ±0.03 (1)	0.10	0.20	0.20
		0.6 ±0.05 (2)	0.3 ±0.05 (2)	0.10	0.20	0.20
0402	1005M	1.0 ±0.05 (1)	0.5 ±0.05 (1)	0.15	0.30	0.40
		1.0 ±0.20 (2)	0.5 ±0.20 (2)	0.15	0.30	0.40
0603	1608M	1.6 ±0.10 (1)	0.8 ±0.10 (1)	0.20	0.60	0.40
		1.6 ±0.20 (2)	0.8 ±0.20 (2)	0.20	0.60	0.40
0805	2012M	2.0 ±0.10 (1)	1.25 ±0.10 (1)	0.25	0.75	0.55
		2.0 ±0.20 (2)	1.25 ±0.20 (2)	0.25	0.75	0.55
1206	3216M	3.2 ±0.15 (1)	1.6 ±0.15 (1)	0.25	0.75	1.40
		3.2 ±0.30 (2)	1.6 ±0.20 (2)	0.25	0.75	1.40
1210	3225M	3.2 ±0.20 (1)	2.5 ±0.20 (1)	0.25	0.75	1.40
		3.2 ±0.40 (2)	2.5 ±0.30 (2)	0.25	0.75	1.40
1808	4520M	4.5 ±0.40	2.0 ±0.30	0.25	0.75	2.20
1812	4532M	4.5 ±0.20 (1)	3.2 ±0.20 (1)	0.25	0.75	2.20
		4.5 ±0.40 (2)	3.2 ±0.40 (2)	0.25	0.75	2.20

Note: 1. Dimension for size 0201, C < 1 µF; 0402, C < 4.7 µF; 0603, C < 10 µF; 0805 to 1812, C ≤ 100 nF
2. Dimension for size 0201, C ≥ 1 µF; 0402, C ≥ 4.7 µF; 0603, C ≥ 10 µF; 0805 to 1812, C > 100 nF

X5R - General purpose & High capacitance, 0201 / 0402

X5R											
General purpose & High capacitance											
Capacitance	Last 2-digit of 12NC	0201					0402				
		6.3 V	10 V	16 V	25 V	50 V	6.3 V	10 V	16 V	25 V	50 V
100 pF	09	0.3 ±0.03	0.3 ±0.03	0.3 ±0.03	0.3 ±0.03	0.3 ±0.03	0.5 ±0.05	0.5 ±0.05	0.5 ±0.05	0.5 ±0.05	0.5 ±0.05
150 pF	12										
220 pF	14										
330 pF	16										
470 pF	18										
680 pF	21										
1.0 nF	23										
1.5 nF	25										
2.2 nF	27										
3.3 nF	29										
4.7 nF	32										
6.8 nF	34										
10 nF	36										
15 nF	39										
22 nF	41										
33 nF	43										
47 nF	45										
68 nF	47										
100 nF	49										
150 nF	52										
220 nF	54	0.3 ±0.03	0.3 ±0.03							0.5 ±0.05	0.5 ±0.05
330 nF	56										
470 nF	58	0.3 ±0.03							0.5 ±0.05	0.5 ±0.05	0.5 ±0.05
680 nF	61										
1 000 nF	63	0.3 ±0.05							0.5 ±0.05	0.5 ±0.05	
2.2 µF	65										
4.7 µF	67						0.5 ±0.15				
10 µF	76						0.5 ±0.2				
Tape width		8 mm									

Note: Values in shaded cells indicate thickness class (unit: mm)

X5R - General purpose & High capacitance, 0603 / 0805

X5R											
General purpose & High capacitance											
Capacitance	Last 2-digit of 12NC	0603					0805				
		6.3 V	10 V	16 V	25 V	50 V	6.3 V	10 V	16 V	25 V	50 V
100 pF	09	0.8 ±0.1	0.8 ±0.1	0.8 ±0.1	0.8 ±0.1	0.8 ±0.1					
150 pF	12										
220 pF	14						0.6 ±0.1	0.6 ±0.1	0.6 ±0.1	0.6 ±0.1	0.6 ±0.1
330 pF	16										
470 pF	18										
680 pF	21										
1.0 nF	23										
1.5 nF	25										
2.2 nF	27										
3.3 nF	29										
4.7 nF	32										
6.8 nF	34										
10 nF	36										
15 nF	39										
22 nF	41										
33 nF	43										
47 nF	45						0.85 ±0.1	0.85 ±0.1	0.85 ±0.1	0.85 ±0.1	0.85 ±0.1
68 nF	47										
100 nF	49										
150 nF	52										
220 nF	54										1.25 ±0.2
330 nF	56						1.25 ±0.2	1.25 ±0.2	1.25 ±0.2	1.25 ±0.2	
470 nF	58										
680 nF	61										
1 000 nF	63										
2.2 µF	65										
4.7 µF	67										
10 µF	76	0.8 ±0.2	0.8 ±0.2								
22 µF	81										
47 µF	85										
100 µF	89										
Tape width		8 mm									

Note: Values in shaded cells indicate thickness class (unit: mm)

X5R						
General purpose & High capacitance						
Capacitance	Last 2-digit of 12NC	1206				
		6.3 V	10 V	16 V	25 V	50 V
100 pF	09					
150 pF	12					
220 pF	14	0.85 ±0.1	0.85 ±0.1	0.85 ±0.1	0.85 ±0.1	0.85 ±0.1
330 pF	16					
470 pF	18					
680 pF	21					
1.0 nF	23					
1.5 nF	25					
2.2 nF	27					
3.3 nF	29					
4.7 nF	32					
6.8 nF	34					
10 nF	36					
15 nF	39					
22 nF	41					
33 nF	43					
47 nF	45					
68 nF	47					
100 nF	49					
150 nF	52					1.15 ±0.1
220 nF	54					
330 nF	56					1.0 ±0.1
470 nF	58					
680 nF	61	1.15 ±0.1	1.15 ±0.1	1.15 ±0.1	1.15 ±0.1	1.6 ±0.2
1 000 nF	63					
2.2 µF	65					
4.7 µF	67	1.6 ±0.2	1.6 ±0.2	1.6 ±0.2	1.6 ±0.2	
10 µF	76					
22 µF	81					
47 µF	85					
100 µF	89					
Tape width		8 mm				

Note: Values in shaded cells indicate thickness class (unit: mm)

X5R - High capacitance, 1210 / 1812

X5R							
General purpose & High capacitance							
Capacitance	Last 2-digit of 12NC	1210					1812
		6.3 V	10 V	16 V	25 V	50 V	50 V
100 pF	09						
150 pF	12						
220 pF	14						
330 pF	16						
470 pF	18						
680 pF	21						
1.0 nF	23						
1.5 nF	25						
2.2 nF	27	0.85 ±0.1	0.85 ±0.1	0.85 ±0.1	0.85 ±0.1	0.85 ±0.1	
3.3 nF	29						
4.7 nF	32						0.85 ±0.1
6.8 nF	34						
10 nF	36						
15 nF	39						
22 nF	41						
33 nF	43						
47 nF	45						
68 nF	47						
100 nF	49						1.25 ±0.2
150 nF	52					1.15 ±0.1	
220 nF	54						
330 nF	56						1.6 ±0.2
470 nF	58	1.15 ±0.1	1.15 ±0.1	1.15 ±0.1	1.15 ±0.1	1.25 ±0.2	
680 nF	61						
1 000 nF	63	1.25 ±0.2	1.25 ±0.2	1.25 ±0.2	1.25 ±0.2		
2.2 µF	65	1.9 ±0.2	1.9 ±0.2	1.9 ±0.2	1.9 ±0.2	1.9 ±0.2	
4.7 µF	67						
10 µF	76					2.5 ±0.2	
22 µF	81		2.5 ±0.2	2.5 ±0.2	2.5 ±0.2		
47 µF	85						
100 µF	89		2.5 ±0.3	2.5 ±0.3			
Tape width		8 mm					

Note: Values in shaded cells indicate thickness class (unit: mm)

Global part number - Preferred type

Global Part Number is the preferred clear text code for ordering Yageo and Phycomp branded products.
For details, please see page 77.

12NC ordering code - Phycomp branded products only

2 2 X X X X X X X X X X

Carrier tape
- 50 = Blister (≤ 6.3 V)
- 55 = Paper / PE (≤ 6.3 V)
- 38 = Paper / PE (≥10 V)
- 22 = Blister (≥10 V)
- 54 = Bulk

Voltage
- 20 = 6.3 V
- 24 = 10 V
- 78 = 16 V
- 91 = 25 V
- 58 = 50 V

Size
- 8 = 0201
- 7 = 0402
- 6 = 0603
- 0 = 0805
- 1 = 1206
- 2 = 1210
- 4 = 1812

Capacitance value
- See selection chart

Tolerance
- 5 = ±5%
- 6 = ±10%
- 7 = ±20%

TC material
- 3 = X5R

Packing
- 1 = 180 mm / 7” reel
- 5 = 330 mm / 13” reel
- 4 = Bulk case

Phycomp CTC ordering code - North America

Regional code for ordering Phycomp branded products. For details, please see page 79.

X5R - Low profile, 0402 to 0805

Features

- Low ESR
- Increased allowable ripple current
- Excellent reliability with high insulation resistance

Temperature characteristic

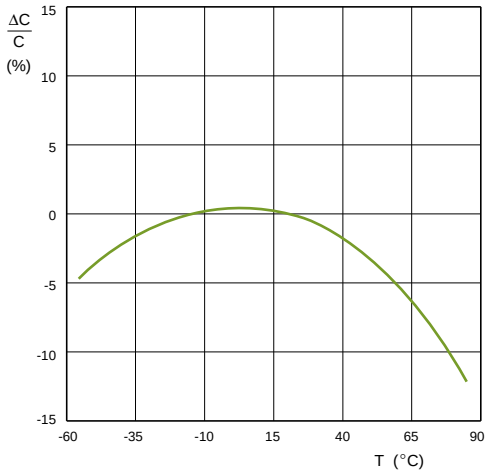

Construction

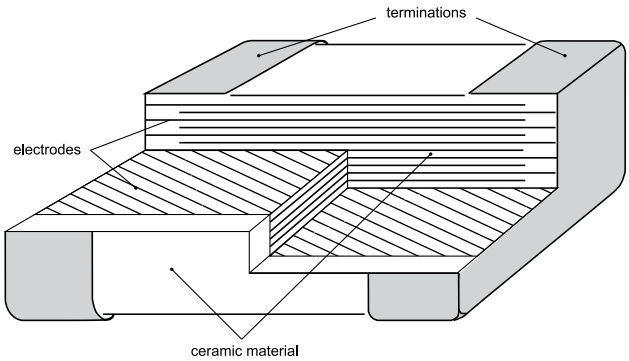

Dimensions

Discrete capacitors - Low profile

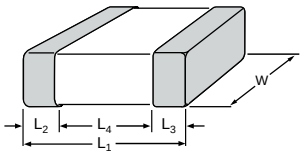

Case size designation		Dimensions in mm				
Inch-based	Metric	L_1	W	L_2 / $L_{3\ min}$	L_2 / $L_{3\ max}$	$L_{4\ min}$
0402	1005M	1.0 ±0.05	0.5 ±0.05	0.15	0.30	0.40
0603	1608M	1.6 ±0.10	0.8 ±0.10	0.20	0.60	0.40
0805	2012M	2.0 ±0.20	1.25 ±0.20	0.25	0.75	0.55

X5R - Low profile, 0402 to 0805

X5R										
Low Profile										
Capacitance	0402				0603				0805	
	6.3 V	10 V	16 V	25 V	6.3 V	10 V	16 V	25 V	6.3 V	10 V
10 nF	0.3 ±0.03	0.3 ±0.03	0.3 ±0.03	0.3 ±0.03						
22 nF										
47 nF										
100 nF	0.3 ±0.03	0.3 ±0.03								
220 nF										
470 nF	0.3 ±0.03	0.3 ±0.03	0.3 ±0.03		0.45 ±0.05					
1 000 nF						0.45 ±0.05	0.45 ±0.05	0.45 ±0.05		
2.2 µF										
4.7 µF									0.45 ±0.05	0.45 ±0.05
10 µF										
Tape width	8 mm									

Note: Values in shaded cells indicate thickness class (unit: mm)

Y5V - General purpose & High capacitance, 0201 to 1210

Features

- High volumetric efficiency
- Non-polar construction

Temperature characteristic

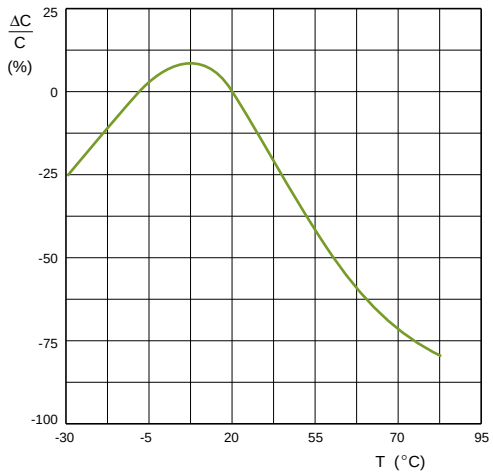

Construction

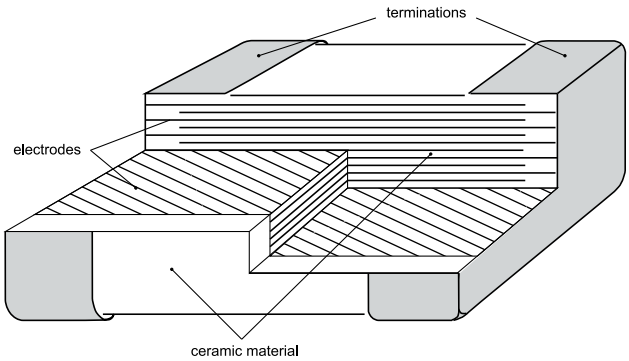

Case dimensions

Discrete capacitors - General purpose & High capacitance

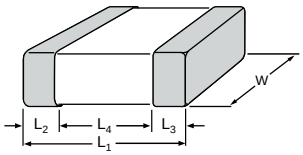

Case size designation		Dimensions in mm				
Inch-based	Metric	L_1	W	L_2 / L_3 min	L_2 / L_3 max	L_4 min
0201	0603M	0.6 ±0.03	0.3 ±0.03	0.10	0.20	0.20
		0.6 ±0.05	0.3 ±0.05	0.10	0.20	0.20
0402	1005M	1.0 ±0.05 (1)	0.5 ±0.05 (1)	0.15	0.30	0.40
		1.0 ±0.20 (2)	0.5 ±0.20 (2)	0.15	0.30	0.40
0603	1608M	1.6 ±0.10 (1)	0.8 ±0.10 (1)	0.20	0.60	0.40
		1.6 ±0.15 (2)	0.8 ±0.15 (2)	0.20	0.60	0.40
0805	2012M	2.0 ±0.10 (1)	1.25 ±0.10 (1)	0.25	0.75	0.55
		2.0 ±0.20 (2)	1.25 ±0.20 (2)	0.25	0.75	0.55
1206	3216M	3.2 ±0.15 (1)	1.6 ±0.15 (1)	0.25	0.75	1.40
		3.2 ±0.30 (2)	1.6 ±0.20 (2)	0.25	0.75	1.40
1210	3225M	3.2 ±0.20 (1)	2.5 ±0.20 (1)	0.25	0.75	1.40
		3.2 ±0.40 (2)	2.5 ±0.30 (2)	0.25	0.75	1.40

Note: 1. Dimension for size 0402, C < 4.7 µF; 0603, C < 10 µF; 0805 to 1210, C ≤ 100 nF
2. Dimension for size 0402, C ≥ 4.7 µF; 0603, C ≥ 10 µF; 0805 to 1210, C > 100 nF

Y5V - General purpose & High capacitance 6.3 to 25V, 0201 / 0402

Y5V						
General purpose & High capacitance						
Capacitance	Last 2-digit of 12NC	0201	0402			
		6.3 V	6.3 V	10 V	16 V	25 V
10 nF	36	0.3 ±0.03	0.5 ±0.05	0.5 ±0.05	0.5 ±0.05	0.5 ±0.05
22 nF	41					
47 nF	45					
100 nF	49					
220 nF	54					
470 nF	58					
1 000 nF	63					
Tape width		8 mm				

Note: Values in shaded cells indicate thickness class (unit: mm)

Y5V - General purpose & High capacitance 6.3 to 25V, 0603 / 0805

Y5V									
General purpose & High capacitance									
Capacitance	Last 2-digit of 12NC	0603				0805			
		6.3 V	10 V	16 V	25 V	6.3 V	10 V	16 V	25 V
10 nF	36	0.8 ±0.1	0.8 ±0.1	0.8 ±0.1	0.8 ±0.1	0.6 ±0.1	0.6 ±0.1	0.6 ±0.1	0.6 ±0.1
22 nF	41								
47 nF	45								
100 nF	49								
220 nF	54								0.85 ±0.1
470 nF	58					0.85 ±0.1	0.85 ±0.1	0.85 ±0.1	
1 000 nF	63								
2.2 µF	67								1.25 ±0.2
4.7 µF	72						1.25 ±0.2	1.25 ±0.2	
10 µF	76					1.25 ±0.2	1.25 ±0.2		
22 µF	81								
Tape width		8 mm							

Note: Values in shaded cells indicate thickness class (unit: mm)

Y5V - General purpose & High capacitance 6.3 to 25V, 1206 / 1210

Y5V									
General purpose & High capacitance									
Capacitance	Last 2-digit of 12NC	1206				1210			
		6.3 V	10 V	16 V	25 V	6.3 V	10 V	16 V	25 V
10 nF	36	0.6 ±0.1	0.6 ±0.1	0.6 ±0.1	0.6 ±0.1				
22 nF	41								
47 nF	45								
100 nF	49								
220 nF	54								
470 nF	58	0.85 ±0.1	0.85 ±0.1	0.85 ±0.1	0.85 ±0.1				
1 000 nF	63								
2.2 µF	67								
4.7 µF	72								
10 µF	76			1.15 ±0.1	1.6 ±0.2	1.5 ±0.1	1.5 ±0.1	1.5 ±0.1	1.5 ±0.1
22 µF	81	1.6 ±0.2	1.6 ±0.2	1.6 ±0.2		1.6 ±0.2	1.6 ±0.2	1.6 ±0.2	
47 µF	85					2.0 ±0.2			
Tape width		8 mm							

Note: Values in shaded cells indicate thickness class (unit: mm)

Y5V - General purpose & High capacitance 50V, 0402 to 1206

Y5V					
General purpose & High capacitance					
Capacitance	Last 2-digit of 12NC	0402	0603	0805	1206
		50 V	50 V	50 V	50 V
10 nF	05	0.5 ±0.05	0.8 ±0.1	0.6 ±0.1	0.6 ±0.1
22 nF	07				
47 nF	09				
100 nF	12				
220 nF	14			0.85 ±0.1	
470 nF	16				0.85 ±0.1
1 000 nF	18			1.25 ±0.2	
2.2 µF	23				1.15 ±0.1
Tape width		8 mm			

Note: Values in shaded cells indicate thickness class (unit: mm)

Global part number - Preferred type

Global Part Number is the preferred clear text code for ordering Yageo and Phycomp branded products.
For details, please see page 77.

12NC ordering code - Phycomp branded products only

2 2 X X X X X X 9 X X X

Carrier tape
- 50 = Blister (≤ 6.3 V)
- 55 = Paper / PE (≤ 6.3 V)
- 38 = Paper / PE
- 22 = Blister
- 54 = Bulk

Voltage
- 20 = 6.3 V
- 24 = 10 V
- 78 = 16 V
- 91 = 25 V
- 58 = 50 V

Capacitance value
- See selection chart

Tolerance
- 7 = ±20%
- 8 = -20 to +80%

Packing
- 1 = 180 mm / 7” reel
- 5 = 330 mm / 13” reel
- 4 = Bulk case

Size
- 8 = 0201
- 7 = 0402
- 6 = 0603
- 0 = 0805
- 1 = 1206
- 2 = 1210

Phycomp CTC ordering code - North America

Regional code for ordering Phycomp branded products. For details, please see page 79.

Features

- Comply with AEC-Q200 standard
- MSL class: MSL 1
- J-STD-020D and TS-16949 compliant
- Halogen free epoxy
- RoHS compliant

Application

- All general purpose applications
- Entertainment applications
- Comfort / security applications
- Information applications

Construction

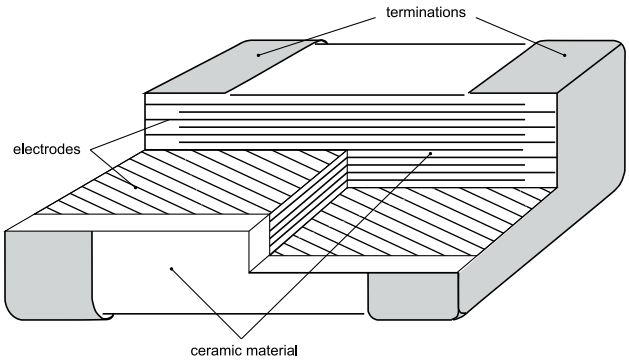

Dimensions

Discrete capacitors - Automotive grade

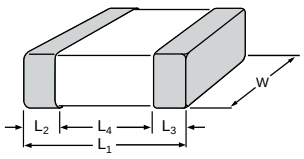

Case size designation		Dimensions in mm				
Inch-based	Metric	L1	W	L2 / L3 min	L2 / L3 max	L4 min
0402	1005M	1.0 ±0.05	0.5 ±0.05	0.15	0.30	0.40
0603	1608M	1.6 ±0.20	0.8 ±0.10	0.20	0.60	0.40
0805	2012M	2.0 ±0.20	1.25 ±0.20	0.25	0.75	0.55
1206	3216M	3.2 ±0.30	1.6 ±0.20	0.25	0.75	1.40
1210	3225M	3.2 ±0.30	2.5 ±0.20	0.25	0.75	1.40

NP0 - Automotive grade, 0402 to 0805

NP0									
Automotive Grade									
Capacitance	0402	0603			0805				
	50 V	50 V	100V	250V	50 V	100 V	250 V	500 V	630 V
10 pF	0.5 ±0.05	0.8 ±0.1	0.8 ±0.1	0.8 ±0.1	0.6 ±0.1	0.6 ±0.1	0.6 ±0.1	0.6 ±0.1	0.6 ±0.1
12 pF									
15 pF									
18 pF									
22 pF									
27 pF									
33 pF									
39 pF									
47 pF									
56 pF									
68 pF									
82 pF									
100 pF									
120 pF									
150 pF									
180 pF									
220 pF							0.85 ±0.1	0.85 ±0.1	0.85 ±0.1
270 pF									
330 pF									
390 pF									
470 pF									
560 pF								1.25 ±0.2	
680 pF									
820 pF									
1 000 pF									
1.2 nF					0.85 ±0.1	0.85 ±0.1			
1.5 nF									
1.8 nF									
2.2 nF					1.25 ±0.2	1.25 ±0.2			
2.7 nF									
3.3 nF									
3.9 nF									
4.7 nF									
5.6 nF									
6.8 nF									
8.2 nF									
10 nF									
Tape width	8mm								

Note: Values in shaded cells indicate thickness class (unit: mm)

NP0 - Automotive grade, 1206 / 1210

NP0									
	Automotive Grade								
Capacitance	1206					1210			
	50 V	100 V	250 V	500 V	630 V	50 V	100 V	250 V	500 V
10 pF	0.6 ±0.1	0.6 ±0.1	0.6 ±0.1	0.6 ±0.1	1.25 ±0.2	1.25 ±0.2	1.25 ±0.2	1.25 ±0.2	1.25 ±0.2
12 pF									
15 pF									
18 pF									
22 pF									
27 pF									
33 pF									
39 pF									
47 pF									
56 pF									
68 pF									
82 pF									
100 pF									
120 pF									
150 pF									
180 pF									
220 pF									
270 pF									
330 pF									
390 pF									
470 pF									
560 pF									
680 pF									
820 pF			0.85 ±0.1	0.85 ±0.1					
1 000 pF									
1.2 nF									
1.5 nF									
1.8 nF			1.25 ±0.2	1.25 ±0.2					
2.2 nF									
2.7 nF									
3.3 nF	0.85 ±0.1	0.85 ±0.1							
3.9 nF									
4.7 nF									
5.6 nF									
6.8 nF									
8.2 nF	1.25 ±0.2	1.25 ±0.2							
10 nF									
Tape width	8mm								

Note: Values in shaded cells indicate thickness class (unit: mm)

X7R - Automotive grade, 0402 / 0603

X7R									
	Automotive grade								
Capacitance	0402				0603				
	10 V	16 V	25 V	50 V	10 V	16 V	25 V	50 V	100V
100 pF	0.5 ±0.05	0.5 ±0.05	0.5 ±0.05	0.5 ±0.05	0.8 ±0.1	0.8 ±0.1	0.8 ±0.1	0.8 ±0.1	0.8 ±0.1
150 pF									
180 pF									
220 pF									
330 pF									
390 pF									
470 pF									
680 pF									
1 000 pF									
1.5 nF									
2.2 nF									
3.3 nF									
4.7 nF									
6.8 nF									
10 nF									
15 nF									
18 nF									
22 nF									
27 nF									
33 nF									
47 nF									
68 nF									
100 nF									
150 nF									
220 nF									
270 nF									
330 nF									
390 nF									
470 nF									
680 nF									
1000 nF									
2.2 µF									
4.7 µF									
10 µF									
Tape width	8mm								

Note: Values in shaded cells indicate thickness class (unit: mm)

X7R - Automotive grade, 0805

X7R							
	Automotive grade						
Capacitance	0805						
	10 V	16 V	25 V	50 V	100 V	250 V	500 V
100 pF							
150 pF							
180 pF							
220 pF	0.6 ±0.1	0.6 ±0.1	0.6 ±0.1	0.6 ±0.1	0.6 ±0.1	0.85 ±0.1	0.85 ±0.1
330 pF							
390 pF							
470 pF							
680 pF							
1 000 pF							
1.5 nF							
2.2 nF							
3.3 nF							
4.7 nF							
6.8 nF						1.25 ±0.2	1.25 ±0.2
10 nF							
15 nF					0.85 ±0.1		
18 nF							
22 nF							
27 nF					1.25 ±0.2		
33 nF							
47 nF	0.85 ±0.1	0.85 ±0.1	0.85 ±0.1	0.85 ±0.1			
68 nF							
100 nF							
150 nF							
220 nF				1.25 ±0.2			
270 nF	1.25 ±0.2	1.25 ±0.2	1.25 ±0.2				
330 nF							
390 nF							
470 nF							
680 nF							
1000 nF							
2.2 µF							
4.7 µF							
10 µF							
Tape width	8mm						

Note: Values in shaded cells indicate thickness class (unit: mm)

X7R									
	Automotive grade								
Capacitance	1206								
	6.3 V	10 V	16 V	25V	50V	100V	250 V	500 V	630 V
100 pF									
150 pF									
180 pF									
220 pF	0.85 ±0.1	0.85 ±0.1	0.85 ±0.1	0.85 ±0.1	0.85 ±0.1	0.85 ±0.1	0.85 ±0.1	1.25 ±0.2	1.25 ±0.2
330 pF									
390 pF									
470 pF									
680 pF									
1 000 pF									
1.5 nF									
2.2 nF									
3.3 nF									
4.7 nF									
6.8 nF									
10 nF									
15 nF									
18 nF							1.25 ±0.2		
22 nF									
27 nF									
33 nF									
47 nF									
68 nF						1.25 ±0.2			
100 nF									
150 nF					1.15 ±0.2				
220 nF									
270 nF					1.6 ±0.2	1.6 ±0.2			
330 nF									
390 nF									
470 nF									
680 nF	1.15 ±0.2	1.15 ±0.2	1.15 ±0.2	1.15 ±0.2					
1000 nF									
2.2 µF									
4.7 µF									
10 µF									
Tape width	8mm								

Note: Values in shaded cells indicate thickness class (unit: mm)

X7R - Automotive grade, 1210

X7R								
	Automotive grade							
Capacitance	1210							
	6.3 V	10 V	16 V	25V	50V	100V	250 V	500 V
100 pF								
150 pF								
180 pF								
220 pF								
330 pF								
390 pF								
470 pF								
680 pF								
1 000 pF								
1.5 nF	0.85 ±0.1	0.85 ±0.1	0.85 ±0.1	0.85 ±0.1	0.85 ±0.1	0.85 ±0.1	0.85 ±0.1	1.25 ±0.2
2.2 nF								
3.3 nF								
4.7 nF								
6.8 nF								
10 nF								
15 nF								
18 nF							1.25 ±0.2	
22 nF								
27 nF								
33 nF								
47 nF								
68 nF								
100 nF							1.6 ±0.2	
150 nF	1.25 ±0.2	1.25 ±0.2	1.25 ±0.2	1.25 ±0.2	1.25 ±0.2	1.25 ±0.2		
220 nF								
270 nF								
330 nF								
390 nF								
470 nF								
680 nF								
1000 nF								
2.2 µF								
4.7 µF								
10 µF								
Tape width	8mm							

Note: Values in shaded cells indicate thickness class (unit: mm)

Features

- Capable of operating at high voltage levels
- For high frequency snubber
- Decoupling/ Smoothing function
- TUV certificate No.: 50031668
- UL certificate No.: E238900

Temperature characteristic

NP0

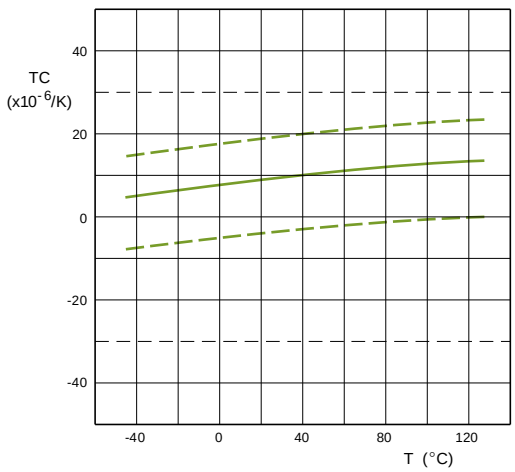

X7R

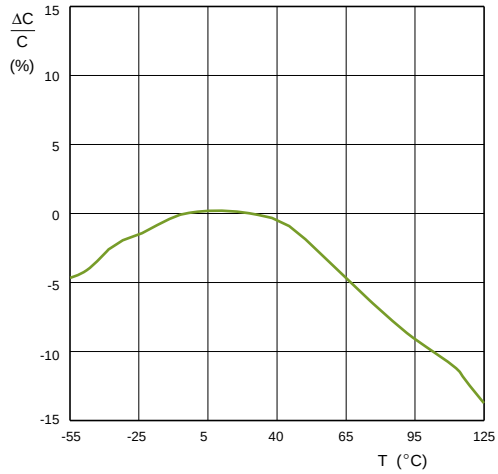

Construction

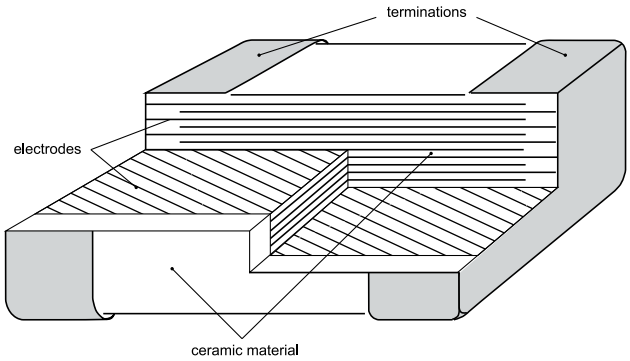

Dimensions

Discrete capacitors - High voltage SC type

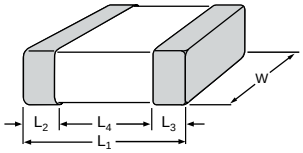

Case size designation		Dimensions in mm			
Inch-based	Metric	L_1	W	L_2 / $L_{3\ min}$	L_2 / $L_{3\ max}$
1808	4520M	4.8 ±0.30	2.0 ±0.30	0.25	0.75
1812	4532M	4.8 ±0.30	3.2 ±0.30	0.25	0.75

NP0 - High voltage SC type, 1808 / 1812

NP0							
High voltage SC type							
Capacitance	Last 2-digit of 12NC	1808		1812		1808	
		X1/Y2 for TUV	X1/Y2 for UL	X1/Y2 for TUV	X1/Y2 for UL	X2/Y3 for TUV	X2/Y3 for UL
10 pF	23	1.6 ±0.2	1.6 ±0.2			1.6 ±0.2	1.6 ±0.2
12 pF	24						
15 pF	25			1.6 ±0.2	1.6 ±0.2		
18 pF	26						
22 pF	27						
27 pF	28						
33 pF	29						
39 pF	31						
47 pF	32						
56 pF	33						
68 pF	34						
82 pF	35						
100 pF	36	2.0 ±0.2	2.0 ±0.2				
120 pF	37			2.0 ±0.2	2.0 ±0.2		
150 pF	38						
180 pF	39					2.0 ±0.2	2.0 ±0.2
220 pF	41						
270 pF	42						
330 pF	43						
390 pF	44						
470 pF	45						
560 pF	46						
680 pF	47						
820 pF	48						
1 000 pF	49						
Tape width		12 mm					

Note: Values in shaded cells indicate thickness class (unit: mm)

X7R - High voltage SC type, 1808 / 1812

X7R							
High voltage SC type							
Capacitance	Last 2-digit of 12NC	1808		1812		1808	
		X1/Y2 for TUV	X1/Y2 for UL	X1/Y2 for TUV	X1/Y2 for UL	X2/Y3 for TUV	X2/Y3 for UL
150 pF	12	1.6 ±0.2	1.6 ±0.2			1.6 ±0.2	1.6 ±0.2
180 pF	13						
220 pF	14			1.6 ±0.2	1.6 ±0.2		
270 pF	15	2.0 ±0.2	2.0 ±0.2				
330 pF	16						
390 pF	17			2.0 ±0.2	2.0 ±0.2		
470 pF	18						
560 pF	19						
680 pF	21					2.0 ±0.2	2.0 ±0.2
820 pF	22						
1 000 pF	23						
1.2 nF	24						
1.5 nF	25						
Tape width		12 mm					

Note: Values in shaded cells indicate thickness class (unit: mm)

Global part number - Preferred type

Global Part Number is the preferred clear text code for ordering Yageo and Phycomp branded products.
For details, please see page 77.

12NC ordering code - Phycomp branded products only

2 2 X X X X X X X X X X

Carrier tape
- 50 = Blister

Impulse voltage
- 52 = X2 / Y3 for TUV / UL
- 53 = X1 for TUV / UL
- 54 = Y2 for TUV / UL

Size
- 3 = 1808
- 4 = 1812

Packing
- 1 = 180 mm / 7” reel
- 5 = 330 mm / 13” reel

TC material
- 1 = NP0
- 5 = X7R

Tolerance
- 5 = ±5%
- 6 = ±10%

Capacitance value
- See selection chart

Phycomp CTC ordering code - North America

Regional code for ordering Phycomp branded products. For details, please see page 79.

Features

- Less than 50% board space of an equivalent discrete component
- High volumetric efficiency
- Increased throughput, by time saved in mounting

Temperature characteristic

NP0

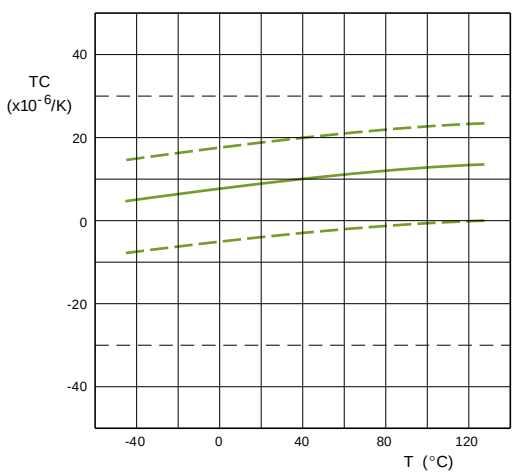

X7R

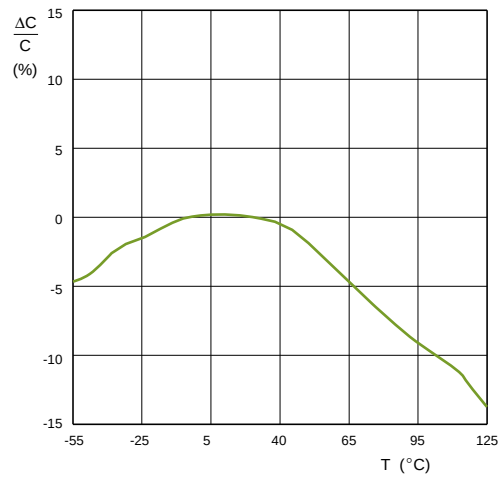

Temperature characteristic

Y5V

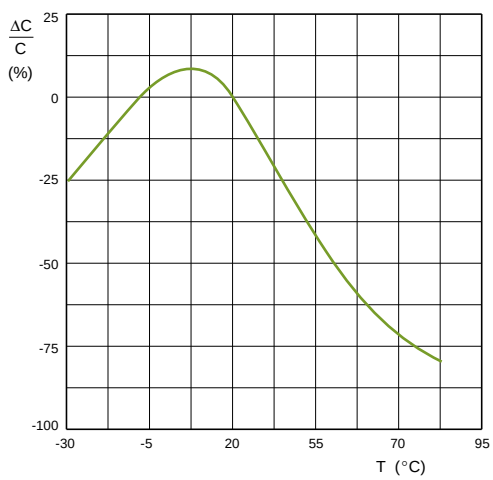

Construction

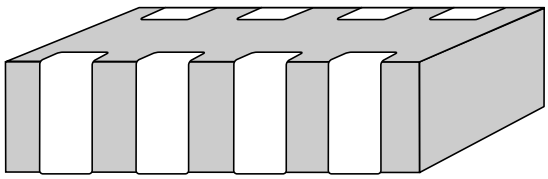

Dimensions

4C arrays

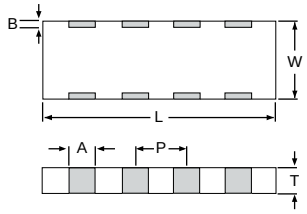

Case size designation		Dimensions in mm						
Inch-based	Metric	L	W	T_{min}	T_{max}	A	B	P
0508 (4 x 0402)	1220M (4 x 1005)	2.0 ±0.15	1.25 ±0.15	0.50	0.70	0.28 ±0.10	0.2 ±0.10	0.5 ±0.10
0612 (4 x 0603)	1632M (4 x 1608)	3.2 ±0.15	1.60 ±0.15	0.70 (1) 0.50 (2)	0.90 (1) 0.70 (2)	0.4 ±0.10	0.3 ±0.20	0.8 ±0.10

Note: 1. Available for NP0 and X7R
2. Available for Y5V

NP0			
4C arrays			
Capacitance	Last 2-digit of 12NC	0508	0612
		50 V	50 V
10 pF	23	0.6 ±0.1	0.8 ±0.1
15 pF	25		
18 pF	26		
22 pF	27		
27 pF	28		
47 pF	32		
100 pF	36		
150 pF	38		
180 pF	39		
220 pF	41		
270 pF	42		
330 pF	43		
390 pF	44		
470 pF	45		
560 pF	46		
680 pF	47		
820 pF	48		
1 000 pF	49		
Tape width		8 mm	

Note: Values in shaded cells indicate thickness class (unit: mm)

X7R - 4C Arrays, 0508 / 0612

X7R							
4C arrays							
Capacitance	Last 2-digit of 12NC	0508			0612		
		16 V	25 V	50 V	16 V	25 V	50 V
180 pF	13					0.8 ±0.1	0.8 ±0.1
220 pF	14			0.6 ±0.1			
270 pF	15						
330 pF	16						
390 pF	17						
470 pF	18						
560 pF	19						
680 pF	21						
820 pF	22						
1 000 pF	23	0.6 ±0.1	0.6 ±0.1				
1.2 nF	24						
1.5 nF	25						
1.8 nF	26						
2.2 nF	27						
2.7 nF	28						
3.3 nF	29						
3.9 nF	31						
4.7 nF	32						
5.6 nF	33						
6.8 nF	34						
8.2 nF	35						
10 nF	36				0.8 ±0.1		
12 nF	37						
15 nF	38						
18 nF	39						
22 nF	41						
27 nF	42						
33 nF	43						
47 nF	45						
56 nF	46						
68 nF	47						
82 nF	48						
100 nF	49						
Tape width		8 mm					

Note: Values in shaded cells indicate thickness class (unit: mm)

Y5V		
4C arrays		
Capacitance	Last 2-digit of 12NC	0612
		25 V
10 nF	36	0.6 ±0.1
22 nF	41	
47 nF	45	
100 nF	49	
Tape width		8 mm

Note: Values in shaded cells indicate thickness class (unit: mm)

Global part number - Preferred type

Global Part Number is the preferred clear text code for ordering Yageo and Phycomp branded products.
For details, please see page 77.

12NC ordering code - Phycomp branded products only

2 2 X X X X X X X X X X

Carrier tape
- 50 = Blister
- 55 = Paper / PE

Voltage
- 10 = 16 V
- 12 = 25 V
- 14 = 50 V

Size
- 7 = 0508 (4 x 0402)
- 6 = 0612 (4 x 0603)

Packing
- 1 = 180 mm / 7” reel

Capacitance value
- See selection chart

Tolerance
- 5 = ±5%
- 6 = ±10%
- 7 = ±20%
- 8 = -20 to +80%

TC material
- 1 = NP0
- 5 = X7R
- 9 = Y5V

Phycomp CTC ordering code - North America

Regional code for ordering Phycomp branded products. For details, please see page 79.

0201 sample kits					
NP0 50 V		NP0 25 V		X7R 50 V	
Capacitance (pF)	Tolerance	Capacitance (pF)	Tolerance	Capacitance (pF)	Tolerance
1	±0.25 pF	27	±5%	47	±10%
1.2	±0.25 pF	33	±5%	68	±10%
1.5	±0.25 pF	39	±5%	100	±10%
1.8	±0.25 pF	47	±5%	150	±10%
2.2	±0.25 pF	56	±5%	220	±10%
2.7	±0.25 pF	68	±5%	330	±10%
3.3	±0.25 pF	82	±5%	470	±10%
3.9	±0.25 pF	100	±5%	X7R 25 V	
4.7	±0.25 pF	Y5V 6.3V		Capacitance (pF)	Tolerance
5.6	±0.50 pF	Capacitance (pF)	Tolerance	680	±10%
6.8	±0.50 pF	100 000	-20% to +80%	1 000	±10%
8.2	±0.50 pF	X5R 6.3V		X7R 16V	
10	±5%	Capacitance (pF)	Tolerance	Capacitance (pF)	Tolerance
12	±5%	100 000	±10%	1 500	±10%
15	±5%			2 200	±10%
18	±5%			3 300	±10%
22	±5%			X7R 10 V	
				Capacitance (pF)	Tolerance
				10 000	±10%

Note: 100 pieces per value. Ordering code 432204407111 for Phycomp brand product, CC020100000000000 for Yageo brand product

0402 sample kits					
NP0 50 V		Y5V 16 V		X7R 50 V	
Capacitance (pF)	Tolerance	Capacitance (pF)	Tolerance	Capacitance (pF)	Tolerance
0.47	±0.25 pF	10 000	±20%	100	±10%
0.68	±0.25 pF	22 000	±20%	150	±10%
1	±0.25 pF	47 000	±20%	220	±10%
1.5	±0.25 pF	100 000	±20%	330	±10%
2.2	±0.25 pF	X5R 25V		470	±10%
3.3	±0.25 pF	Capacitance (pF)	Tolerance	680	±10%
4.7	±0.25 pF	100 000	±10%	1 000	±10%
6.8	±0.50 pF			1 500	±10%
10	±5%			2 200	±10%
15	±5%			3 300	±10%
22	±5%			X7R 25 V	
33	±5%			Capacitance (pF)	Tolerance
47	±5%			4 700	±10%
68	±5%			100 000	±10%
100	±5%			X7R 16 V	
150	±5%			Capacitance (pF)	Tolerance
220	±5%			6 800	±10%
				10 000	±10%
				15 000	±10%
				22 000	±10%

Note: 95 pieces per value. Ordering code 432204409911 for Phycomp brand product, CC040200000000000 for Yageo brand product

Sample kits for 0603 / 0805

0603 sample kits

NP0 50 V		NP0 25 V		X7R 50 V	
Capacitance (pF)	Tolerance	Capacitance (pF)	Tolerance	Capacitance (pF)	Tolerance
0.47	±0.25 pF	1 000	±5%	100	±10%
0.68	±0.25 pF	1 500	±5%	150	±10%
1	±0.25 pF	Y5V 50 V		220	±10%
1.5	±0.25 pF	Capacitance (pF)	Tolerance	330	±10%
2.2	±0.25 pF	10 000	±20%	470	±10%
3.3	±0.25 pF	22 000	±20%	680	±10%
4.7	±0.25 pF	47 000	±20%	1 000	±10%
6.8	±0.50 pF	100 000	±20%	1 500	±10%
10	±5%	Y5V 16 V		2 200	±10%
15	±5%	Capacitance (pF)	Tolerance	3 300	±10%
22	±5%	220 000	±20%	4 700	±10%
33	±5%	470 000	±20%	6 800	±10%
47	±5%			10 000	±10%
68	±5%			X7R 25 V	
100	±5%			Capacitance (pF)	Tolerance
150	±5%			15 000	±10%
220	±5%			22 000	±10%
330	±5%			X7R 16 V	
470	±5%			Capacitance (pF)	Tolerance
680	±5%			33 000	±10%
				47 000	±10%
				68 000	±10%
				100 000	±10%

Note: 48 pieces per value. Ordering code 432204407121 for Phycomp brand product, CC060300000000000 for Yageo brand product

0805 sample kits

NP0 50 V		NP0 25 V		X7R 50 V	
Capacitance (pF)	Tolerance	Capacitance (pF)	Tolerance	Capacitance (pF)	Tolerance
0.47	±0.25 pF	3 300	±5%	220	±10%
0.68	±0.25 pF	4 700	±5%	330	±10%
1	±0.25 pF	Y5V 50 V		470	±10%
1.5	±0.25 pF	Capacitance (pF)	Tolerance	680	±10%
2.2	±0.25 pF	10 000	±20%	1 000	±10%
3.3	±0.25 pF	22 000	±20%	1 500	±10%
4.7	±0.25 pF	47 000	±20%	2 200	±10%
6.8	±0.50 pF	100 000	±20%	3 300	±10%
10	±5%	220 000	±20%	4 700	±10%
15	±5%	Y5V 16 V		6 800	±10%
22	±5%	Capacitance (pF)	Tolerance	10 000	±10%
33	±5%	470 000	±20%	15 000	±10%
47	±5%	1 000 000	±20%	22 000	±10%
68	±5%			33 000	±10%
100	±5%			47 000	±10%
150	±5%			68 000	±10%
220	±5%			100 000	±10%
330	±5%			X7R 16 V	
470	±5%			Capacitance (pF)	Tolerance
680	±5%			150 000	±10%
1 000	±5%			220 000	±10%
1 500	±5%			330 000	±10%
2 200	±5%			470 000	±10%

Note: 48 pieces per value. Ordering code 432204407131 for Phycomp brand product, CC080500000000000 for Yageo brand product

1206 sample kits					
NP0 50 V		NP0 25 V		X7R 50 V	
Capacitance (pF)	Tolerance	Capacitance (pF)	Tolerance	Capacitance (pF)	Tolerance
1	±0.25 pF	10 000	±5%	220	±10%
1.5	±0.25 pF	Y5V 50 V		330	±10%
2.2	±0.25 pF	Capacitance (pF)	Tolerance	470	±10%
3.3	±0.25 pF	100 000	±20%	680	±10%
4.7	±0.25 pF	220 000	±20%	1 000	±10%
6.8	±0.50 pF	470 000	±20%	1 500	±10%
10	±5%	1 000 000	±20%	2 200	±10%
15	±5%			3 300	±10%
22	±5%			4 700	±10%
33	±5%			6 800	±10%
47	±5%			10 000	±10%
68	±5%			15 000	±10%
100	±5%			22 000	±10%
150	±5%			33 000	±10%
220	±5%			47 000	±10%
330	±5%			68 000	±10%
470	±5%			100 000	±10%
680	±5%			150 000	±10%
1 000	±5%			220 000	±10%
1 500	±5%			X7R 16 V	
2 200	±5%			Capacitance (pF)	Tolerance
3 300	±5%			330 000	±10%
4 700	±5%			470 000	±10%
6 800	±5%			680 000	±10%
				1 000 000	±10%

Note: 48 pieces per value. Ordering code 432204407141 for Phycomp brand product, CC120600000000000 for Yageo brand product

Sample kits for high capacitance series

High capacitance sample kits

X5R 0402		
Capacitance	Rated voltage	Tolerance
1 µF	6.3 V	±10%
1 µF	10 V	±10%
2.2 µF	6.3 V	±20%

X5R 0603		
Capacitance	Rated voltage	Tolerance
1 µF	16 V	±10%
1 µF	25 V	±10%
2.2 µF	6.3 V	±10%
2.2 µF	10 V	±10%
2.2 µF	16 V	±10%
4.7 µF	6.3 V	±10%
4.7 µF	10 V	±10%
10 µF	6.3 V	±20%

X5R 0805		
Capacitance	Rated voltage	Tolerance
2.2 µF	25 V	±10%
4.7 µF	6.3 V	±10%
4.7 µF	10 V	±10%
4.7 µF	16 V	±10%
10 µF	6.3 V	±10%
10 µF	10 V	±10%
10 µF	16 V	±10%
22 µF	6.3 V	±20%

X5R 1206		
Capacitance	Rated voltage	Tolerance
4.7 µF	16 V	±10%
4.7 µF	25 V	±10%
10 µF	16 V	±10%
10 µF	25 V	±10%
22 µF	6.3 V	±20%

X7R 0603		
Capacitance	Rated voltage	Tolerance
1 µF	16 V	±10%

X7R 0805		
Capacitance	Rated voltage	Tolerance
1 µF	25 V	±10%
2.2 µF	16 V	±10%
2.2 µF	25 V	±10%

X7R 1206		
Capacitance	Rated voltage	Tolerance
1 µF	25 V	±10%
2.2 µF	25 V	±10%
4.7 µF	25 V	±10%
10 µF	16 V	±10%

Y5V 0402		
Capacitance	Rated voltage	Tolerance
1 µF	6.3 V	-20% to +80%
1 µF	10 V	-20% to +80%

Y5V 0603		
Capacitance	Rated voltage	Tolerance
1 µF	10 V	-20% to +80%
1 µF	16 V	-20% to +80%
2.2 µF	10 V	-20% to +80%
2.2 µF	16 V	-20% to +80%
4.7 µF	6.3 V	-20% to +80%

Y5V 0805		
Capacitance	Rated voltage	Tolerance
1 µF	16 V	-20% to +80%
1 µF	25 V	-20% to +80%
1 µF	50 V	-20% to +80%
2.2 µF	16 V	-20% to +80%
4.7 µF	10 V	-20% to +80%
10 µF	10 V	-20% to +80%

Y5V 1206		
Capacitance	Rated voltage	Tolerance
4.7 µF	16 V	-20% to +80%
10 µF	10 V	-20% to +80%
10 µF	16 V	-20% to +80%
22 µF	16 V	-20% to +80%

Note: 50 pieces per value. Ordering code 432204510001 for Phycomp brand product, CC888800000000000 for Yageo brand product

High capacitance sample kits for smart phone

X5R 0201		
Capacitance	Rated voltage	Tolerance
100 nF	6.3 V	±10%
100 nF	10 V	±10%
220 nF	6.3 V	±20%
470 nF	6.3 V	±20%
1 µF	6.3 V	±20%

X5R 0402		
Capacitance	Rated voltage	Tolerance
1 µF	6.3 V	±10%
1 µF	10 V	±10%
1 µF	16 V	±10%
2.2 µF	6.3 V	±20%
4.7 µF	6.3 V	±20%
10 µF	6.3 V	±20%

X5R 0603		
Capacitance	Rated voltage	Tolerance
1 µF	16 V	±10%
1 µF	25 V	±10%
2.2 µF	10 V	±10%
2.2 µF	16 V	±10%
4.7 µF	6.3 V	±10%
4.7 µF	10 V	±10%
10 µF	6.3 V	±20%
22 µF	6.3 V	±20%

X5R 0805		
Capacitance	Rated voltage	Tolerance
2.2 µF	16 V	±10%
2.2 µF	25 V	±10%
4.7 µF	6.3 V	±10%
4.7 µF	10 V	±10%
4.7 µF	16 V	±10%
4.7 µF	25 V	±10%
10 µF	6.3 V	±10%
10 µF	10 V	±10%
10 µF	16 V	±10%
22 µF	6.3 V	±20%
47 µF	6.3 V	±20%

X5R 1206		
Capacitance	Rated voltage	Tolerance
10 µF	16 V	±10%
10 µF	25 V	±10%
22 µF	6.3 V	±10%
47 µF	6.3 V	±20%

Note: 50 pieces per value. Ordering code SP888800000000000 for Yageo brand product

High voltage sample kits for general applications					
NP0 1206			X7R 1206		
Capacitance	Rated voltage	Tolerance	Capacitance	Rated voltage	Tolerance
10 pF	1 kV	±5%	10 nF	1 kV	±10%
100 pF	1 kV	±5%	1 nF	2 kV	±10%
1 nF	1 kV	±5%	1 nF	1 kV	±10%
10 pF	2 kV	±5%	X7R 1210		
100 pF	2 kV	±5%	Capacitance	Rated voltage	Tolerance
NP0 1210			1 nF	1 kV	±10%
Capacitance	Rated voltage	Tolerance	10 nF	1 kV	±10%
10 pF	1 kV	±5%	1 nF	2 kV	±10%
100 pF	1 kV	±5%	X7R 1808		
1 nF	1 kV	±5%	Capacitance	Rated voltage	Tolerance
10 pF	2 kV	±5%	10 nF	1 kV	±10%
100 pF	2 kV	±5%	1 nF	3 kV	±10%
NP0 1808			1 nF	1 kV	±10%
Capacitance	Rated voltage	Tolerance	1 nF	2 kV	±10%
10 pF	1 kV	±5%	X7R 1812		
100 pF	1 kV	±5%	Capacitance	Rated voltage	Tolerance
1 nF	1 kV	±5%	10 nF	2 kV	±10%
10 pF	3 kV	±5%	1 nF	1 kV	±10%
100 pF	3 kV	±5%	10 nF	1 kV	±10%
10 pF	2 kV	±5%			
100 pF	2 kV	±5%			
NP0 1812					
Capacitance	Rated voltage	Tolerance			
10 pF	2 kV	±5%			
100 pF	2 kV	±5%			
1 nF	2 kV	±5%			
10 pF	1 kV	±5%			
100 pF	1 kV	±5%			
1 nF	1 kV	±5%			
10 pF	3 kV	±5%			
100 pF	3 kV	±5%			

Note: 50 pieces per value. Ordering code 432204510013 for Phycomp brand product, HV777700000000000 for Yageo brand product

High voltage sample kits for safety certification MLCCs

High voltage sample kits for safety certification MLCCs					
NP0 1808 TUV / UL			X7R 1808 TUV / UL		
Capacitance	Safety certification	Tolerance	Capacitance	Safety certification	Tolerance
10 pF	X1 / Y2	±5%	150 pF	X1 / Y2	±10%
22 pF	X1 / Y2	±5%	220 pF	X1 / Y2	±10%
47 pF	X1 / Y2	±5%	330 pF	X1 / Y2	±10%
100 pF	X1 / Y2	±5%	470 pF	X1 / Y2	±10%
150 pF	X1 / Y2	±5%	680 pF	X1 / Y2	±10%
220 pF	X1 / Y2	±5%	1 nF	X1 / Y2	±10%
330 pF	X1 / Y2	±5%	X7R 1812 TUV / UL		
NP0 1812 TUV / UL			Capacitance	Safety certification	Tolerance
Capacitance	Safety certification	Tolerance	220 pF	X1 / Y2	±10%
10 pF	X1 / Y2	±5%	330 pF	X1 / Y2	±10%
22 pF	X1 / Y2	±5%	470 pF	X1 / Y2	±10%
47 pF	X1 / Y2	±5%	680 pF	X1 / Y2	±10%
100 pF	X1 / Y2	±5%	1 nF	X1 / Y2	±10%
150 pF	X1 / Y2	±5%	1.5 nF	X1 / Y2	±10%
220 pF	X1 / Y2	±5%	X7R 1808 TUV / UL		
NP0 1808 TUV / UL			Capacitance	Safety certification	Tolerance
Capacitance	Safety certification	Tolerance	470 pF	X2 / Y3	±10%
10 pF	X2 / Y3	±5%	680 pF	X2 / Y3	±10%
22 pF	X2 / Y3	±5%	1 nF	X2 / Y3	±10%
47 pF	X2 / Y3	±5%	1.5 nF	X2 / Y3	±10%
100 pF	X2 / Y3	±5%			
150 pF	X2 / Y3	±5%			
220 pF	X2 / Y3	±5%			

Note: 50 pieces per value. Ordering code 432204510014 for Phycomp brand product, SC999900000000000 for Yageo brand product

0402 high frequency sample kits		
NP0		
Capacitance	Rated voltage	Tolerance
0.22 pF	50 V	±0.1 pF
0.47 pF	50 V	±0.1 pF
0.68 pF	50 V	±0.1 pF
0.82 pF	50 V	±0.1 pF
1 pF	50 V	±0.25 pF
1.2 pF	50 V	±0.25 pF
1.5 pF	50 V	±0.25 pF
1.8 pF	50 V	±0.25 pF
2.2 pF	50 V	±0.25 pF
2.7 pF	50 V	±0.25 pF
3.3 pF	50 V	±0.25 pF
3.9 pF	50 V	±0.25 pF
4.7 pF	50 V	±0.25 pF
5.6 pF	50 V	±0.5 pF
6.8 pF	50 V	±0.5 pF
8.2 pF	50 V	±0.5 pF

Note: 50 pieces per value. Ordering code 432204409912 for Phycomp brand product, CH040200000000000 for Yageo brand product

0603 high frequency sample kits		
NP0		
Capacitance	Rated voltage	Tolerance
0.22 pF	50 V	±0.1 pF
0.47 pF	50 V	±0.1 pF
0.68 pF	50 V	±0.1 pF
0.82 pF	50 V	±0.1 pF
1 pF	50 V	±0.25 pF
1.2 pF	50 V	±0.25 pF
1.5 pF	50 V	±0.25 pF
1.8 pF	50 V	±0.25 pF
2.2 pF	50 V	±0.25 pF
2.7 pF	50 V	±0.25 pF
3.3 pF	50 V	±0.25 pF
3.9 pF	50 V	±0.25 pF
4.7 pF	50 V	±0.25 pF
5.6 pF	50 V	±0.5 pF
6.8 pF	50 V	±0.5 pF
8.2 pF	50 V	±0.5 pF

Note: 50 pieces per value. Ordering code 432204407122 for Phycomp brand product, CH060300000000000 for Yageo brand product

Sample kits for all sizes, all types, E1 series only

All sizes, all types, E1 series only

General purpose & High capacitance

	NP0 50 V		X7R 50 V		X7R 16 V		Y5V 16 V	
	Capacitance (pF)	Tolerance	Capacitance (pF)	Tolerance	Capacitance (pF)	Tolerance	Capacitance (pF)	Tolerance
0402	1	±0.25 pF	100	±10%	10 000	±10%	100 000	±20%
	10	±5%	1 000	±10%				
	100	±5%						
	NP0 50 V		X7R 50 V		X7R 16 V		Y5V 10 V	
	Capacitance (pF)	Tolerance	Capacitance (pF)	Tolerance	Capacitance (pF)	Tolerance	Capacitance (pF)	Tolerance
0603	1	±0.25 pF	100	±10%	100 000	±10%	1 000 000	-20% to +80%
	10	±5%	1 000	±10%				
	100	±5%	10 000	±10%				
	NP0 50 V		X7R 50 V		X7R 10 V		Y5V 10 V	
	Capacitance (pF)	Tolerance	Capacitance (pF)	Tolerance	Capacitance (pF)	Tolerance	Capacitance (pF)	Tolerance
0805	1	±0.25 pF	1 000	±10%	1 000 000	±10%	4 700 000	-20% to +80%
	10	±5%	10 000	±10%				
	100	±5%	100 000	±10%				
	1 000	±5%						
	NP0 50 V		X7R 50 V		X7R 16 V		Y5V 10 V	
	Capacitance (pF)	Tolerance	Capacitance (pF)	Tolerance	Capacitance (pF)	Tolerance	Capacitance (pF)	Tolerance
1206	1	±0.25 pF	1 000	±10%	1 000 000	±10%	10 000 000	-20% to +80%
	10	±5%	10 000	±10%				
	100	±5%	100 000	±10%				
	1 000	±5%						

Microwave

Size	NP0 50 V	
	Capacitance (pF)	Tolerance
0603	1	±0.25 pF
0805	3.3	±0.25 pF
1206	3.9	±0.25 pF

Array (4 x 0603)

Size	NP0 50 V		X7R 25 V		X7R 16 V	
	Capacitance (pF)	Tolerance	Capacitance (pF)	Tolerance	Capacitance (pF)	Tolerance
0612	100	±5%	10 000	±10%	100 000	±10%
	1 000	±5%				

High voltage

Size	NP0 3 kV		X7R 1 kV	
	Capacitance (pF)	Tolerance	Capacitance (pF)	Tolerance
1808	10	±5%		
1812	100	±5%	10 000	±10%

Note: 48 pieces per value (95 pieces for 0402 and 25 pieces for 1812). Ordering code 432204500581 for Phycomp brand product, CC999900000000000 for Yageo brand product

SMD CERAMIC EMI FILTER CAPACITORS
X2Y® PRODUCTS

NP0						
Size	Y-Capacitor		X-Capacitor		Thickness (mm)	Global part number
	Capacitance (nF)	Voltage rating (V)	Capacitance (nF)	Voltage rating (V)		
0805	0.01	50	0.005	100	0.85	CX 0805 MR NPO 9BB 100
	0.022	50	0.011	100	0.85	CX 0805 MR NPO 9BB 220
	0.047	50	0.023	100	0.85	CX 0805 MR NPO 9BB 470

X7R						
Size	Y-Capacitor		X-Capacitor		Thickness (mm)	Global part number
	Capacitance (nF)	Voltage rating (V)	Capacitance (nF)	Voltage rating (V)		
0603	1	100	0.5	200	0.65	CX 0603 MR X7R 0BB 102
	1.5	100	0.75	200		CX 0603 MR X7R 0BB 152
	2.2	100	1.1	200		CX 0603 MR X7R 0BB 222
	4.7	100	2.4	200		CX 0603 MR X7R 0BB 472
	5.6	50 / 63	2.8	100		CX 0603 MR X7R 9BB 562
		100		200		CX 0603 MR X7R 0BB 562
	10	50 / 63	5	100		CX 0603 MR X7R 9BB 103
	22	25	11	50		CX 0603 MR X7R 8BB 223
	47	16	24	25		CX 0603 MR X7R 7BB 473
	56	16	28	25		CX 0603 MR X7R 7BB 563
	100	10	50	16		CX 0603 MR X7R 6BB 104
0805	1	100	0.5	200	0.85	CX 0805 MR X7R 0BB 102
	4.7	100	2.4	200		CX 0805 MR X7R 0BB 472
	10	100	5	200		CX 0805 MR X7R 0BB 103
	15	50 / 63	8	100		CX 0805 MR X7R 9BB 153
	18	50 / 63	9	100		CX 0805 MR X7R 9BB 183
	22	50 / 63	11	100		CX 0805 MR X7R 9BB 223
	39	25	20	50		CX 0805 MR X7R 8BB 393
	47	16	24	25		CX 0805 MR X7R 7BB 473
	100	16	50	25		CX 0805 MR X7R 7BB 104
	180	10	90	16		CX 0805 MR X7R 6BB 184
1206	47	50 / 63	24	100	1.20	CX 1206 MK X7R 9BB 473
	100	50 / 63	50	100		CX 1206 MK X7R 9BB 104
	220	16	110	25		CX 1206 MK X7R 7BB 224
	390	16	195	25		CX 1206 MK X7R 7BB 394
	470	10	235	25		CX 1206 MK X7R 7BB 474
1210	470	25	235	50	1.60	CX 1210 MK X7R 8BB 474
	560	25	280	50	1.60	CX 1210 MK X7R 8BB 564
	820	16	410	25	1.60	CX 1210 MK X7R 7BB 824
	1000	16	500	25	1.60	CX 1210 MK X7R 7BB 105

X5R						
Size	Y-Capacitor		X-Capacitor		Thickness (mm)	Global part number
	Capacitance (nF)	Voltage rating (V)	Capacitance (nF)	Voltage rating (V)		
0603	220	10	110	16	0.65	CX 0603 MR X5R 6BB 224
	330		165			CX 0603 MR X5R 6BB 334
	470		235			CX 0603 MR X5R 6BB 474

Note: 1. Special values are available on request
2. Ordering codes for preferred versions (20% tolerance, 180 mm reel). For packing and tolerance information, see section "Thickness classes and packing quantities" on next page

Global part number

Ordering example: CX0603MKX7R6BB104

CX 0603 M K X7R 6 B B 104

Series name (code 1-2)
- CX = X2Y®-series

Size code (code 3-6)

EIA	mm
0603	(1608M)
0805	(2012M)
1206	(3216M)
1210	(3225M)
1410	(3625M)
1812	(4632M)

Capacitance tolerance (code 7)
- M = ±20%

Packing style (code 8)
- R = Paper tape reel Ø7"
- K = Embossed plastic tape reel Ø7"

TC material (code 9-11)
- NP0
- X7R
- X5R

Capacitance value (code 15-17)
- 104 = 100 000 pF
- (2 significant digits+number of zeros; the 3rd digit signifies the multiplying factor, and letter R is decimal point)
- 0 = x 1
- 1 = x 10^1
- 2 = x 10^2
- 3 = x 10^3
- 4 = x 10^4
- 5 = x 10^5
- 6 = x 10^6

Process code (code 14)
- B = BME

Termination (code 13)
- B = Ni-barrier

Rated voltage (code 12)
- 5 = 6.3 V
- 6 = 10 V
- 7 = 16 V
- 8 = 25 V
- 9 = 50 V
- 0 = 100 V

Thickness classes and packing quantities

Thickness Classification (mm)	Quantity per reel	
	8 mm tape width	
	Ø180mm / 7”	
	Paper	Blister
0.65 ±0.10	4 000	---
0.85 ±0.10	4 000	---
1.20 ±0.15	---	2 500
1.60 ±0.15	---	2 500

HIGH FREQUENCY PRODUCTS

Specification overview - Antenna

Wireless communication - networks & applications

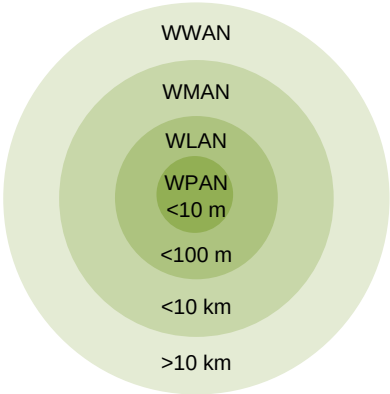

- Wireless Wide Area Network (WWAN)_IEEE 802.20
- Wireless Metropolitan Area Network (WMAN)_IEEE 802.16 (Mobile/Fixed) ►**WiMAX**
- Wireless Local Area Network (WLAN)_IEEE 802.11 a/b/g/n ►**WiFi, MIMO**
- Wireless Personal Area Network (WPAN)_IEEE 802.15 ►**Bluetooth, ZigBee, UWB**

Function	Networking	Application	Operating Frequency	Polarization	Impedance	Temp. Range
Antenna	WPAN	Bluetooth	2400-2484 MHz	Linear	50 Ω	-40 °C to 90 °C
		UWB_BG1	3168-4752 MHz			
		UWB_BG3	6336-7920 MHz			
		RFID	13.56 MHz			
	WLAN	WiFi	2400-2484 MHz			
			5150-5850 MHz			
	WMAN	WiMAX	2300-2700 MHz			
			3300-3800 MHz			
			5150-5850 MHz			
	WWAN	GSM-850	824-894 MHz			
		GSM-900	880-960 MHz			
		GSM-1800	1710-1880 MHz			
		GSM-1900	1850-1990 MHz			
		UMTS	1920-2170 MHz			
		Active GPS	1575 MHz			
		LTE-Band 17	704-746 MHz			
		LTE-Band 13	746-787 MHz			
		LTE-Band 40	2300-2400 MHz			
		LTE-Band 07	2500-2690 MHz			

Antenna for WWAN - GSM/LTE, Satellite Communication - GPS

WWAN - GSM/LTE antenna					
Function	Frequency Range	Type*	Dimensions** (mm)	Polarization	Radiation Pattern
Triple-band GSM_US ant	824-894 / 1850-2170 MHz	Planar	60x10	Linear	Near Omni-Directional
		3-D Structure	55x9x2.5		
Triple-band GSM_EU ant	880-960 / 1710-1990 MHz	Planar	55x10		
		3-D Structure	55x9x2		
Quad-band GSM_US ant	824-894 / 1710-2170 MHz	Planar	63x10		
		3-D Structure	55x10x2.5		
Quad-band GSM_EU ant	880-960 / 1710-2170 MHz	Planar	60x10		
		3-D Structure	55x10x2.5		
Penta-band GSM ant	824-960 / 1710-2170 MHz	Planar	65x10		
		3-D Structure	55x10x3		
Six-band GSM/LTE ant	704-960 / 1710-2170 MHz	Planar	75x13		
		3-D Structure	75x12x3		
Seven-band GSM/LTE ant	824-960 / 1710-2170 / 2300-2690 MHz	Planar	75x13		
		3-D Structure	70x12x3		
Eight-band GSM/LTE ant	704-960 / 1710-2170 / 2300-2690 MHz	Planar	85x14		
		3-D Structure	80x12x3		

Satellite Communication - GPS antenna					
Function	Frequency Range	Type*	Dimensions** (mm)	Polarization	Radiation Pattern
GPS antenna	1575 MHz	Planar	20x8.5	Linear	Near Omni-Directional
		3-D Structure	15x8x2		
Active GPS antenna	1575 MHz	Planar	n/a	Linear	Near Omni-Directional
		3-D Structure	35x8x3		

Note: * The antenna can be implemented by material of PCB/Metal/FPC/LDS as the planar or 3-D structure.
** Dimensions depend on the layout and environment of practical application. The shown dimensions are tested by demoboard.

Antenna for WPAN / WLAN / WMAN

WPAN - Bluetooth / Ultra wideband / Radio frequency identification antenna					
Function	Frequency Range	Type*	Dimensions** (mm)	Polarization	Radiation Pattern
Bluetooth antenna	2400-2484 MHz	Planar	10x10	Linear	Near Omni-Directional
		3-D Structure	10x9x2		
UWB antenna_BG1	3168-4752 MHz	Planar	30x10		
		3-D Structure	30x8.5x2		
UWB antenna_BG1+BG3	3168-4752 / 6336-7920 MHz	Planar	30x10		
		3-D Structure	30x9x2		
RFID antenna	13.56 MHz	PCB	40x30	NFC	
		FPC	40x40		

WLAN - WiFi antenna					
Function	Frequency Range	Type*	Dimensions** (mm)	Polarization	Radiation Pattern
Single-band WiFi antenna	2400-2484 MHz	Planar	13x10	Linear	Near Omni-Directional
		3-D Structure	13x9x2		
Dual-band WiFi antenna	2400-2484 / 5150-5850 MHz	Planar	15x10		
		3-D Structure	15x9x2		

WMAN - WiMAX antenna					
Function	Frequency Range	Type*	Dimensions** (mm)	Polarization	Radiation Pattern
Dual-band WiMAX antenna	2300-2700 / 5150-5850 MHz	Planar	25x10	Linear	Near Omni-Directional
		3-D Structure	25x9x2		
Triple-band WiMAX antenna	2400-2484 / 3300-3800 / 5150-5850 MHz	Planar	30x10		
		3-D Structure	30x9x3		

Note: * The antenna can be implemented by material of PCB/Metal/FPC/LDS as the planar or 3-D structure.
** Dimensions depend on the layout and environment of practical application. The shown dimensions are tested by demoboard.

Specification overview - Chip antenna

Function		Application	Frequency	Size* (metric-based)	Unit
Antenna	Chip antenna	Bluetooth	2.45 GHz	2012, 2516, 3012, 3216, 4018, 5010, 5320 6020, 6522, 7355, 7836, 8010, 9520	0.1 mm
				1004, 1204, 1903	mm
		WiFi	2.45 GHz, 5 GHz, 2.45 / 5 GHz	2012, 2516, 3012, 3216, 4018, 5010, 5320 6020, 6522, 7355, 7836, 8010, 9520	0.1 mm
				1004, 1204, 1903	mm
		UHF	433 MHz, 570 MHz, 870 MHz	1204, 1614, 3807	mm
		FM	88-108 MHz	1105, 2405	mm
		WiMAX	2.3-2.7 GHz, 3.3-3.9 GHz	3216, 8010	0.1 mm
		GPS	1.575 GHz	1266	mm
				3216, 5320, 6230	0.1 mm
		DECT / WCDMA	1.8 / 2 GHz	8868	mm
		GSM	900 MHz / 1.8 GHz	2112	mm
	Patch antenna	GPS	1.575 GHz	1010, 1212, 1313, 1515, 1818, 2525	mm
		Glonass	1.6 GHz		
		SDARS	2.3 GHz		
Fitler	Band pass filter	Bluetooth	2.45 GHz	1608, 2012, 2520	0.1 mm
		WiFi	2.45 GHz, 5 GHz		0.1 mm
	Low pass filter	Bluetooth	2.45 GHz	1608, 2012	0.1 mm
		WiFi	2.45 GHz, 5 GHz		0.1 mm
		WiMAX	2.3-2.7 GHz, 3.3-3.9 GHz		0.1 mm
	Diplexer	WiFi	2.45 / 5 GHz	2012	0.1 mm
Balancer	Balun	Bluetooth	2.45 GHz	1608, 2012	0.1 mm
		WiFi	2.45 GHz, 5 GHz		
		WiMAX	2.3-2.7 GHz, 3.3-3.9 GHz	2012	
	Balanced filter (combo)	Bluetooth	2.45 GHz	2012, 2520	0.1 mm

Note: Mesurement of size code: 20 (length) 12 (width) equals to 20 (unit) 12 (unit)

Patch antenna for GPS / SDARS / Glonass

GPS patch antenna (CP)								
Dimensions (mm)	Frequency range	Bandwidth* (MHz)	Gain* (dBic/Max.)	Polarization	Axial ratio	VSWR*	Temp. range (°C)	Packing (Bulk)
12x12x2	1575±2 MHz	6	-3.5	Circular	< 3	< 2.0	-25 to 85	CAN43134220C1581B
12x12x4		6	-1					CAN43134220D1581B
13x13x4		6	0					CAN43134229D1581B
15x15x2		6	-1					CAN43134230C1581B
15x15x4		7	1.5					CAN43134230D1581B
18x18x2		5	2					CAN43134240C1581B
18x18x4		10	4					CAN43134240D1581B
25x25x2		10	5					CAN43134250C1581B
25x25x4		20	5.5					CAN43134250D1581B

GPS patch antenna (LP)							
Dimensions (mm)	Frequency range	Bandwidth (MHz)	Gain* (dBi/Max.)	Polarization	VSWR*	Temp. range (°C)	Packing (Bulk)
10x4x4	1575±2 MHz	20	1.61	Linear	< 2.0	-25 to 85	CAN4311441001581K
15x10x4		6	0				CAN43134450D1581B
16x06x4		8	-0.5				CAN43134460D1581B

GPS active module							
Dimensions (mm)	Frequency range	Polarization	LNA Gain* (dB/Max.)	Noise Figure* (dB/Typical)	Current Consumption (mA/Max.)	Temp. range (°C)	Packing (Bulk)
13x13x5.5	1575±2 MHz	Circular	17	1.5	6	-25 to 85	CAN4313434881581B
13x13x7.5			17	1.5	6		CAN4313434861581B
15x15x7.5			15.1	2.5	3		CAN4313434621581B
15x15x7.5			15.1	2.5	3		CAN4313435621581B
16x16x7.5			16	1.5	5		CAN4313435921581B
19x19x5.5			30	1.5	6		CAN4313437951581B
19x19x7.5			30	1.5	6		CAN4313437931581B
20x06x6.4		Linear	15	1.5	8		CAN4313466621581B
			20	1	5		CAN4313466641581B
			25	1.5	15		CAN4313466661581B

Note: " * " marks that the value depends on the Yageo demoboard

Chip antenna for FM / UHF / GPS / GSM / WiMAX

FM chip antenna

Dimensions (mm)	Frequency range*	Bandwidth (MHz)	Gain* (dBi/Max.)	Polarization	Azimuth	VSWR*	Temp. range (ºC)	Packing	
								Bulk	Tape
11x5x1.3	88-108 MHz	---	---	Linear	Omni-directional	---	-25 to 85	---	CAN4311629000882K
24x5x1.6									CAN4311050010882K

UHF chip antenna (433 MHz)

Dimensions (mm)	Frequency range*	Bandwidth (MHz)	Gain* (dBi/Max.)	Polarization	Azimuth	VSWR*	Temp. range (°C)	Packing	
								Bulk	Tape
12x4x1.5	400-500 MHz	> 20	0.83	Linear	Omni-directional	< 3.0	-40 to 125	---	CAN4311129200431K
12x4x1.6			0.79				-25 to 85	----	CAN4311029020431K
37.5x6.8x0.9	433 MHz		0.5			< 3.0	-55 to 125	CAN4313121200431B	CAN4311121200431K

UHF chip antenna (870 MHz)

Dimensions (mm)	Frequency range*	Bandwidth (MHz)	Gain* (dBi/Max.)	Polarization	Azimuth	VSWR*	Temp. range (°C)	Packing	
								Bulk	Tape
12x4x1.0 (P)	800-900 MHz	> 15	1.05	Linear	Omni-directional	< 2.8	-25 to 85	---	CAN4311129100871K
12x4x1.6	800-900 MHz	> 20	0.5			< 2.0	-40 to 125	---	CAN4311129040871K
									CAN4311129050871K
									CAN4311129060871K
									CAN4311129070871K
									CAN4311129080871K
									CAN4311129090871K
16.5x14x0.9	790-880 MHz	> 80	-0.25			< 2.5	-55 to 125	CAN4313119000871B	---

GPS chip antenna

Dimensions (mm)	Frequency range*	Bandwidth (MHz)	Gain* (dBi/Max.)	Polarization	Azimuth	VSWR*	Temp. range (ºC)	Packing	
								Bulk	Tape
3.2x1.6x1.2 (P)	1.575 GHz	> 90	7.32	Linear	Omni-Directional	< 2.5	-25 to 85	---	CAN4311712151583K
5.3x2.0x1.2 (P)			3.16			< 2.0		---	CAN4311153141582K
6.2x3.0x1.5		55	2.52			< 2.0	-55 to 125	---	CAN4311113011582K

DECT/WCDMA chip antenna

Dimensions (mm)	Frequency range*	Bandwidth (MHz)	Gain* (dBi/Max.)	Polarization	Azimuth	VSWR*	Temp. range (°C)	Packing	
								Bulk	Tape
8.8x6.8x0.9	1.88-2.1 GHz	> 100	2.0	Linear	Omni-directional	< 2.0	-55 to 125	---	CAN4311112001881K

WiMAX chip antenna

Dimensions (mm)	Frequency range*	Bandwidth (MHz)	Gain* (dBi/Max.)	Polarization	Azimuth	VSWR*	Temp. range (°C)	Packing	
								Bulk	Tape
3.2x1.6x1.3	3.3-3.9 GHz	> 100	2.8	Linear	Omni-directional	< 2.0	-25 to 85	---	CAN4311712063503K
10x0.6x1.2	2.3-2.7 GHz		2.0			< 3.0		---	CAN4311861002371K

Note: " * " marks that the value depends on the Yageo demoboard
" (P) " represents PIFA mode antenna

Chip antenna for Dual-band / Chip-on-Board / WWAN

Dual-band WiFi chip antenna

Dimensions (mm)	Frequency range*	Bandwidth (MHz)	Gain* (dBi/Max.)	Polarization	Azimuth	VSWR*	Temp. range (°C)	Packing	
								Bulk	Tape
5.3x2.0x1.2	2.45 / 5.2 GHz	150 / 900	2.72 / 3.85	Linear	Omni-directional	< 2.8	-25 to 85	---	CAN4311153042522K
								---	CAN4311153062522K

Dual-band GPS / WiFi chip antenna

Dimensions (mm)	Frequency range*	Bandwidth (MHz)	Gain* (dBi/Max.)	Polarization	Azimuth	VSWR*	Temp. range (ºC)	Packing	
								Bulk	Tape
5.3x2.0x1.2 (P)	1.575 / 2.45 GHz	20 / 100	2.47 / 2.04	Linear	Omni-directional	< 2.0	-25 to 85	----	CAN4311853071522K

Dual-band chip antenna (900/1800 MHz)

Dimensions (mm)	Frequency range*	Bandwidth (MHz)	Gain* (dBi/Max.)	Polarization	Azimuth	VSWR*	Temp. range (°C)	Packing	
								Bulk	Tape
12x4.4x1.2	880-960 MHz	> 20	0.5 -1	Linear	Omni-directional	< 3.0	-40 to 125	---	CAN4311116719181K
	1710-1880 MHz	> 170							
21x12x0.9	880-960 MHz	> 30	0.5 -1			< 2.7	-25 to 85	CAN4313118009181B	---
	1710-1880 MHz	> 170							

Chip-on-Board antenna (with Cable & Connector)

Dimensions (mm)	Frequency range*	Bandwidth (MHz)	Gain* (dBi/Max.)	Polarization	Azimuth	VSWR*	Temp. range (ºC)	Packing	
								Bulk	Tape
10x4x2.6	2450 MHz	100	1.22	Linear	Omni-directional	< 2.8	-25 to 85	CAN4313A81042451B	----
								CAN4313B81042451B	----
								CAN4313C81042451B	----
								CAN4313D81042451B	----
30x5x5.3	800-900 MHz	60	1.7			< 2.0		CAN4313A29A20871B	----
	433 MHz	15	3.85					CAN4313A29A20431B	----

WWAN chip antenna

Dimensions (mm)	Frequency range*	Bandwidth (MHz)	Gain * (dBi/Max.)	Polarization	Azimuth	VSWR*	Temp. range (°C)	Packing	
								Bulk	Tape
35x5x6	824-960 MHz	> 140	2.91	Linear	Omni-directional	< 2.8	-40 to 85	CAN4313449009181B	---
	1710-2170 MHz	> 470				< 3.5			

Note: " * " marks that the value depends on the Yageo demoboard

Bluetooth / WiFi antennna								
Dimensions (mm)	Frequency range	Bandwidth* (MHz)	Gain* (dBi/Max.)	Polarization	Azimuth	VSWR*	Temp. range (°C)	Packing (Tape)
2.0x1.2x1.1	2.45 GHz	< 200	3.12	Linear	Omni-Directional	< 2.8	-40 to 85	CAN4311714002454K
3.2x1.6x1.2			5.0					CAN4311712002453K
3.2x1.6x1.2 (P)			3.68					CAN4311712112453K
5.0x1.0x1.0			2.28					CAN4311851062453K
5.3x2.0x1.3			5.5					CAN4311153002451K
5.3x2.0x1.2 (P)			2.78					CAN4311153232452K
6.0x2.0x1.0		> 200	5.1					CAN4311860052452K
7.3x5.5x1.3			1.2					CAN4311111002451K
7.8x3.6x0.9			4.1					CAN4311115002451K
8.0x1.0x1.0			5.88					CAN4311881042453K
9.5x2.0x1.1	2.70 GHz		2.85					CAN4311895052452K
12x4.0x2.0 (P)	2.45 GHz		6.66			< 2.0		CAN4311029012451K
19x3.0x3.6 (P)		> 300	5.0					CAN4311093012451K

Note: " * " marks that value depends on the Yageo demoboard
" (P) " represents PIFA mode antenna

Band pass filter								
Dimensions (mm)	Frequency range*	Pass band (MHz)	Impedance	Insertion loss	Ripple	VSWR*	Attenuation (Min.)	Packing (Tape)
1.6x0.8x0.65	2.45 GHz	2400-2500	50 ohm	2.4 dB	0.5 dB	< 2.0	30 dB @ 880-960 MHz	CFL4111515012454K
							20 dB @ 1710-1990 MHz	
							8.5 dB @ 2170 MHz	
							30 dB @ 4800-5000 MHz	
							25 dB @ 7200-7500 MHz	
2.0x1.25x1.0				2.0 dB	0.6 dB		40 dB @ 1000-1600 MHz	CFL4111714032454K
							40 dB @ 4900 MHz	
							20 dB @ 7500 MHz	
2.0x1.25x0.85				1.8 dB	0.5 dB		30 dB @ 880-960 MHz	CFL4111714062454K
							30 dB @ 1710-1990 MHz	
							25 dB @ 4800-5000 MHz	
							30 dB @ 7200-7500 MHz	
				2.6 dB	0.6 dB		40 dB @ 880-960 MHz	CFL4111514172454K
							40 dB @ 1710-1990 MHz	
							20 dB @ 2110-2170 MHz	
							30 dB @ 4800-5000 MHz	
							30 dB @ 7200-7500 MHz	
				2.8 dB	0.5 dB		40 dB @ 1600 MHz	CFL4111714192454K
							38 dB @ 3200 MHz	
							20 dB @ 4800 MHz	
							25 dB @ 7200 MHz	
				1.2 dB	0.6 dB		15 dB @ 1600 MHz	CFL4111514892454K
							25 dB @ 3200 MHz	
							20 dB @ 4800-5000MHz	
2.0x1.25x0.8	5 GHz	5150-5850		1.8 dB	0.5 dB		30 dB @ 2400-2500 MHz	CFL4111714055004K
							20 dB @ 4700 MHz	
2.5x2.0x0.95	2.45 GHz	2400-2500		2.5 dB	0.6 dB		40 dB @ 880-960 MHz	CFL4111713022453K
							30 dB @ 2100 MHz	
							30 dB @ 4800-5000 MHz	
							30 dB @ 7200-7500 MHz	
				1.5 dB			40 dB @ 880-960 MHz	CFL4111713032453K
							30 dB @ 1710-1785 MHz	
							30 dB @ 1850-1910 MHz	
							20 dB @ 4800-5000 MHz	
							30 dB @ 7200-7500 MHz	
				2.2 dB			30 dB @ 1600 MHz	CFL4111713182453K
							35 dB @ 3200 MHz	
							25 dB @ 4800-5000 MHz	
							30 dB @ 7200-7500 MHz	

Note: " * " marks that the value depends on the Yageo demoboard

Low pass filter								
Dimensions (mm)	Frequency range*	Pass Band (MHz)	Impedance	Insertion loss	Ripple	VSWR*	Attenuation (Min.)	Packing (Tape)
1.6x0.8x0.65	2.37 GHz	2300-2700	50 ohm	< 0.6 dB	0.6 dB	< 1.5	35 dB @ 4800 MHz	CFL4111715522374K
							25 dB @ 7200 MHz	
	2.45 GHz	2400-2500		0.45 dB			25 dB @ 5000 MHz	CFL4111715502454K
							18 dB @ 7500 MHz	
2.0x1.25x0.85	2.45 GHz	2400-2500		0.5 dB	0.6 dB	< 1.8	27 dB @ 5000 MHz	CFL4111714502454K
							25 dB @ 7500 MHz	
							25 dB @ 10,000 MHz	
	3.5 GHz	3000-4000				< 2.0	35 dB @ 6800 MHz	CFL4111714503504K
							30 dB @ 11,000 MHz (Ref.)	

Note: " * " marks that the value depends on the Yageo demoboard

Diplexer

Diplexer						
Dimensions (mm)	Frequency range	Pass band (MHz)	Insertion loss	VSWR	Attenuation (Min.)	Packing (Tape)
2.0x1.25x0.75	2.4 / 5 GHz	2400-2500	< 0.7 dB	< 2.0	17 dB @ 4800-6000 MHz	CFL4111714822504K
					20 dB @ 7200-7500 MHz	
		4900-5900	< 1.6 dB		17 dB @ 1800-2500 MHz	
					20 dB @ 10300-10700 MHz (Ref.)	
2.0x1.25x0.85		2400-2500	< 0.7 dB		20 dB @ 4900-5900 MHz	CFL4111714852504K
		4900-5900	< 0.9 dB		20 dB @ 2400-2500 MHz	
		2400-2500	< 0.6 dB		20 dB @ 4900-5900 MHz	CFL4111714862504K
		4900-5900	< 0.9 dB		25 dB @ 2400-2500 MHz	
2.0x1.25x0.9		2400-2500	< 0.5 dB		20 dB @ 4800-6000 MHz	CFL4111714882504K
					20 dB @ 7200-7500 MHz	
		4900-5900	< 0.9 dB		25 dB @ 1800-2500 MHz	
					25 dB @ 9800-11800 MHz (Ref.)	

Balun									
Dimensions (mm)	Frequency range*	Pass band (MHz)	Impedance	Insertion loss	Ripple	VSWR*	Amplitude balance	Phase differential	Packing (Tape)
1.6x0.8x0.65	2.45 GHz	2400-2500	50/50 ohm	< 1.2 dB	0.6 dB	< 2.0	< 1.0 dB	180°±10°	CBA4711715002454K
	5 GHz	4900-5950	50/100 ohm				< 1.2 dB		CBA4711715015004K
2.0x1.25x0.80	2.45 GHz	2400-2500	50/50 ohm	< 1.0 dB			2.0 dB		CBA4711714002454K
			50/100 ohm						CBA4711714012454K
			50/200 ohm						CBA4711714022454K
	5 GHz	4900-5900	50/100 ohm	< 1.2 dB					CBA4711714015004K

Balanced filter (combo)									
Dimensions (mm)	Frequency range*	Pass band (MHz)	Unbalanced impedance	Balanced impedance	Insertion loss	Amplitude balance	Phase differential	Attenuation (MHz/Min.)	Packing (Tape)
2.0x1.2x0.9	2.45 GHz	2400-2500	50 ohm	Conjugate match to CSR BC03/ 04/05 series	< 3.5 dB	< 1.0 dB	180°±10°	40 dB @ 880-960	CBA4711714982454K
								25 dB @ 1300-1600	
								35 dB @ 4800-5000	
								30 dB @ 7200-7500	
						< 1.3 dB	180°±13°	40 dB @ 880-960	CBA4711714672454K
								25 dB @ 1300-1600	
								30 dB @ 4800-5000	
								25 dB @ 7200-7500	
2.0x1.2x0.8	2.45 GHz	2400-2500	50 ohm	Conjugate match to CSR BC03/ 04/05 series	< 3.5 dB	< 1.3 dB	180°±13°	40 dB @ 880-960	CBA4711814572454K
								25 dB @ 1300-1600	
								35 dB @ 4800-5000	
								25 dB @ 7200-7500	
				Conjugate match to CSR BC03/ 04/05 series	< 3.3 dB	< 1.2 dB	180°±13°	40 dB @ 880-960	CBA4711814472454K
								25 dB @ 1300-1600	
								30 dB @ 4800-5000	
								25 dB @ 7200-7500	
				Conjugate match to CSR BC04/ 05/06 series	< 2.8 dB	< 1.5 dB	180°±10°	35 dB @ 880-960	CBA4711514372454K
								30 dB @ 1710-1880	
								20 dB @ 1880-1990	
								30 dB @ 4800-5000	
				Conjugate match to MTK MT 6616 series	< 3.1 dB	< 1.5 dB	180°±10°	35 dB @ 880-960	CBA4711514312454K
								30 dB @ 1710-1880	
								20 dB @ 1880-1990	
								30 dB @ 4800-5000	

Note: " * " marks that the value depends on the Yageo demoboard

MULTILAYER CHIP VARISTORS

Case dimensions and specification for 0402

Case dimensions

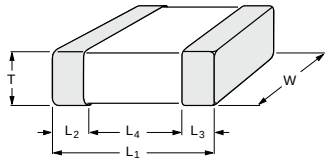

Case size designation	Dimensions in mm						
Inch-based	L_1	W	T_{min}	T_{max}	L_2 / $L_{3\ min}$	L_2 / $L_{3\ max}$	$L_{4\ min}$
0402	1.0 ±0.10	0.5 ±0.10	0.45	0.55	0.15	0.30	0.40
0603	1.6 ±0.20	0.8 ±0.10	0.70	0.90	0.20	0.60	0.40

MLV

General purpose							
0402							
Working voltage	5.5 V	5.5 V	9 V	14 V	14 V	18 V	18 V
Varistor voltage	10 ~ 14 V	7.2 ~ 10.8V	10.2~13.8V	18~24 V	16.2~19.8V	24~32 V	21.6~26.4 V
1 pF	0.5 ±0.1			0.5 ±0.1		0.5 ±0.1	
3 pF		0.5 ±0.1	0.5 ±0.1		0.5 ±0.1		
10 pF							
22 pF							0.5 ±0.1
33 pF							
50 pF							
82 pF							
100 pF							
120 pF							
160 pF							
200 pF							
250 pF							
360 pF							
470 pF							
650 pF							
900 pF							
Tape width	8 mm						

Specification for 0603

MLV							
General purpose							
0603							
Working voltage	5.5 V	5.5 V	9 V	14 V	14 V	18 V	30 V
Varistor voltage	10 ~ 14 V	7.2 ~ 10.8V	9.6 ~ 14.4V	9.6 ~ 14.4V	18 ~ 24V	24 ~ 32 V	38 ~ 46 V
1 pF							
3 pF							
10 pF	0.8 ±0.1	0.8 ±0.1		0.8 ±0.1		0.8 ±0.1	
22 pF			0.8 ±0.1		0.8 ±0.1		0.8 ±0.1
33 pF							
50 pF							
82 pF							
100 pF							
120 pF							
160 pF							
200 pF							
250 pF							
360 pF							
470 pF							
650 pF							
900 pF							
Tape width	8 mm						

Ordering information for 0402 / 0603

Global part number

Ordering example: VRS0402KR55R680N

VR S 0402 K R 55R 680 N

Series name (code 1-2)
- VR = Varistor

Chip type (code 3)
- S = Single chip

Size code (code 4-7)
- 0402
- 0603

Varistor voltage tolerance (code 8)
- K = ±10%
- L = ±15%
- M = ±20 %
- S = Special range

Packing style (code 9)
- R = paper tape reel Ø7 inch

Process code (code 16)
- N = Normal
- S = ESD up to 15 kV

Capacitance value (code 13-15)
- 680 = 68 pF
- (2 significant digits+number of zeros; the 3rd digit signifies the multiplying factor, and letter R is decimal point)
- 0 = x 1
- 1 = x 10^1

Working voltage (code 10-12)
- 33R = 3.3 V
- 55R = 5.5 V
- 090 = 9 V
- 110 = 11 V
- 120 = 12 V
- 140 = 14 V
- 150 = 15 V
- 160 = 16 V
- 180 = 18 V
- 220 = 22 V
- 260 = 26 V
- 300 = 30 V
- 310 = 31 V
- 380 = 38 V

Thickness classification and packing quantities

Type	Thickness classification (mm)	8 mm tape width per reel 180 mm / 7” Paper
0402	0.50 ±0.05	10 000
0603	0.80 ±0.10	4 000

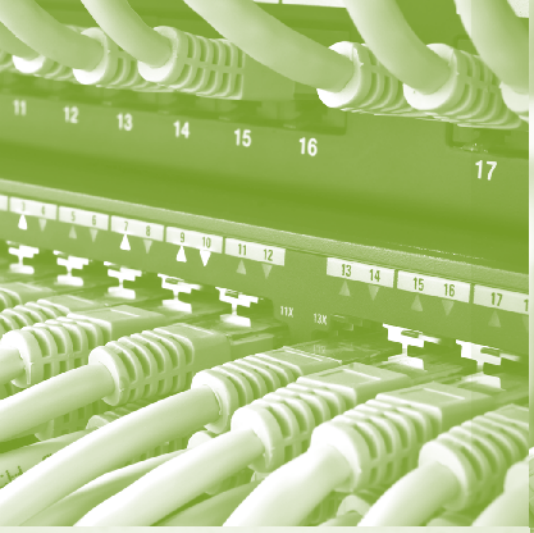
11 12 13 14 15 16 17
1 2 3 4 5 6 7 8 9 10 11 12 13 14 15 16 17
11X 13X

people that walk with their heads downward! The Antipathies, I think—' (she was rather glad there WAS no one listening, this time, as it didn't sound at all the right word) '—but I shall have to ask them what the name of the country is, you know. Please, Ma'am, is this New Zealand or Australia?' (and she tried to curtsey as she spoke—fancy CURTSEYING as you're falling through the air! Do you think you could manage it?) 'And what an ignorant little girl she'll think me for asking! No, it'll never do to ask: perhaps I shall see it written up somewhere.'
Down, down, down. There was nothing else to do, so Alice soon began talking again. 'Dinah'll miss me very much to-night, I should think!' (Dinah was the cat.) 'I hope they'll remember her saucer of milk at tea-time. Dinah my dear! I wish you were down here with me! There are no mice in the air, I'm afraid, but you

25054
1-200A 240V 1 Phase 3 Wire 1Kh 60Hz
Watthour Meter
02/07

INPUT 220VAC 50Hz 7.0A

YAGEO - A GLOBAL COMPANY

ASIA

Chengdu, China
Tel. +86 27 5983 8939
Fax. +86 27 5983 8939

Chongqing, China
Tel. +86 27 5983 8939
Fax. +86 27 5983 8939

Dongguan, China
Tel. +86 769 8772 0275
Fax. +86 769 8791 0053

Hong Kong, China
Tel. +852 2342 6833
Fax. +852 2342 6588

Mudu, China
Tel. +86 512 6651 8889
Fax. +86 512 6651 9889

Qingdao, China
Tel. +86 532 8797 0533
Fax. +86 532 8797 0533

Suzhou, China
Tel. +86 512 6825 5568
Fax. +86 512 6825 5386

Wuhan, China
Tel. +86 27 5983 8939
Fax. +86 27 5983 8939

Saitama, Japan
Tel. +81 48 795 8953
Fax. +81 48 795 8954

Seongnam, Korea
Tel. +82 31 712 4797
Fax. +82 31 712 5866

Kuala Lumpur, Malaysia
Tel. +60 3 8063 8864
Fax. +60 3 8063 7376

Singapore
Tel. +65 6244 7800
Fax. +65 6244 4943

Taipei, Taiwan
Tel. +886 2 2917 7555
Fax. +886 2 2917 4286

EUROPE

Roermond, Benelux
Tel. +31 475 385 555
Fax. +31 475 385 589

Suresnes, France
Tel. +33 1 46 14 87 91
Fax. +39 02 6601 7490

Hamburg, Germany
Tel. +49 4121 870 189
Fax. +49 4121 870 271

Munich, Germany
Tel. +49 8999 216 552
Fax. +49 8999 216 200

Szombathely, Hungary
Tel. +36 94 517 702
Fax. +36 94 517 701

Milan, Italy
Tel. +39 02 6129 1017
Fax. +39 02 6601 7490

Moscow, Russian Federation
Tel. +7 916 625 92 38
Fax. +7 498 610 07 07

Surrey, UK
Tel. +44 7831 79 7754
Fax. +31 475 385 589

NORTH AMERICA

San Jose, U.S.A.
Tel. +1 408 240 6200
Fax. +1 408 240 6201

For more detailed and always up-to-date contact details of sales offices, distributors and representatives, please go to our website at

www.yageo.com

© YAGEO Corporation

All rights are reserved. Reproduction in whole or in part is prohibited without the prior written consent of the copyright owner.
The information presented in this document does not form part of any quotation or contract, is believed to be accurate and reliable and may be changed without notice.
No liability will be accepted by the publisher for any consequence of its use. Publication thereof does not convey nor imply any license under patent or other industrial or intellectual property rights.

Printed in Taiwan

Document order number: YL 100 00136

Date of release: January 2012

Innovative Service Around the Globe YAGEO